Deye®

Hybrid Inverter

SUN-3.6K-SG03LP1-EU

SUN-5K-SG03LP1-EU

SUN-6K-SG03LP1-EU

User Manual

Contents

1. Safety Introductions 01
2. Product instructions 01-04
2.1 Product Overview
2.2 Product Size
2.3 Product Features
2.4 Basic System Architecture
3. Installation 05-21
3.1 Parts list
3.2 Mounting instructions
3.3 Battery connection
3.4 Grid connection and backup load connection
3.5 PV Connection
3.6 CT Connection
3.6.1 Meter Connection
3.7 Earth Connection(mandatory)
3.8 WIFI Connection
3.9 Wiring System for Inverter
3.10 Typical application diagram of diesel generator
3.11 Single phase parallel connection diagram
3.12 Three phase Parallel Inverter
4. OPERATION 22
4.1 Power ON/OFF
4.2 Operation and Display Panel
5. LCD Display Icons 23-37
5.1 Main Screen
5.2 Solar Power Curve
5.3 Curve Page-Solar & Load & Grid
5.4 System Setup Menu
5.5 Basic Setup Menu
5.6 Battery Setup Menu
5.7 System Work Mode Setup Menu
5.8 Grid Setup Menu
5.9 The method of CEI-021 Self-Check
5.10 Generator Port Use Setup Menu
5.11 Advanced Function Setup Menu
5.12 Device Info Setup Menu
6. Mode 37-39
7. Fault information and processing 39-42
8. Limitation of Liability 42
9. Datasheet 43-44
10. Appendix I 45-46
11. Appendix II 48

About This Manual

The manual mainly describes the product information, guidelines for installation, operation and maintenance. The manual cannot include complete information about the photovoltaic (PV) system.

How to Use This Manual

Read the manual and other related documents before performing any operation on the inverter. Documents must be stored carefully and be available at all times.

Contents may be periodically updated or revised due to product development. The information in this manual is subject to change without notice. The latest manual can be acquired via service@deye.com.cn

1. Safety Introductions

· This chapter contains important safety and operating instructions. Read and keep this manual for future reference.
· Before using the inverter, please read the instructions and warning signs of the battery and corresponding sections in the instruction manual.
· Do not disassemble the inverter. If you need maintenance or repair, take it to a professional service center.
· Improper reassembly may result in electric shock or fire.
· To reduce risk of electric shock, disconnect all wires before attempting any maintenance or cleaning. Turning off the unit will not reduce this risk.
· Caution: Only qualified personnel can install this device with battery.
· Never charge a frozen battery.
· For optimum operation of this inverter, please follow required specification to select appropriate cable size. It is very important to correctly operate this inverter.
· Be very cautious when working with metal tools on or around batteries. Dropping a tool may cause a spark or short circuit in batteries or other electrical parts, even cause an explosion.
· Please strictly follow installation procedure when you want to disconnect AC or DC terminals. Please refer to "Installation" section of this manual for the details.
· Grounding instructions - this inverter should be connected to a permanent grounded wiring system. Be sure to comply with local requirements and regulation to install this inverter.
· Never cause AC output and DC input short circuited. Do not connect to the mains when DC input short circuits.

2. Product Introduction

This is a multifunctional inverter, combining functions of inverter, solar charger and battery charger to offer uninterruptible power support with portable size. Its comprehensive LCD display offers user configurable and easy accessible button operation such as battery charging, AC/solar charging, and acceptable input voltage based on different applications.

2.1 Product Overview

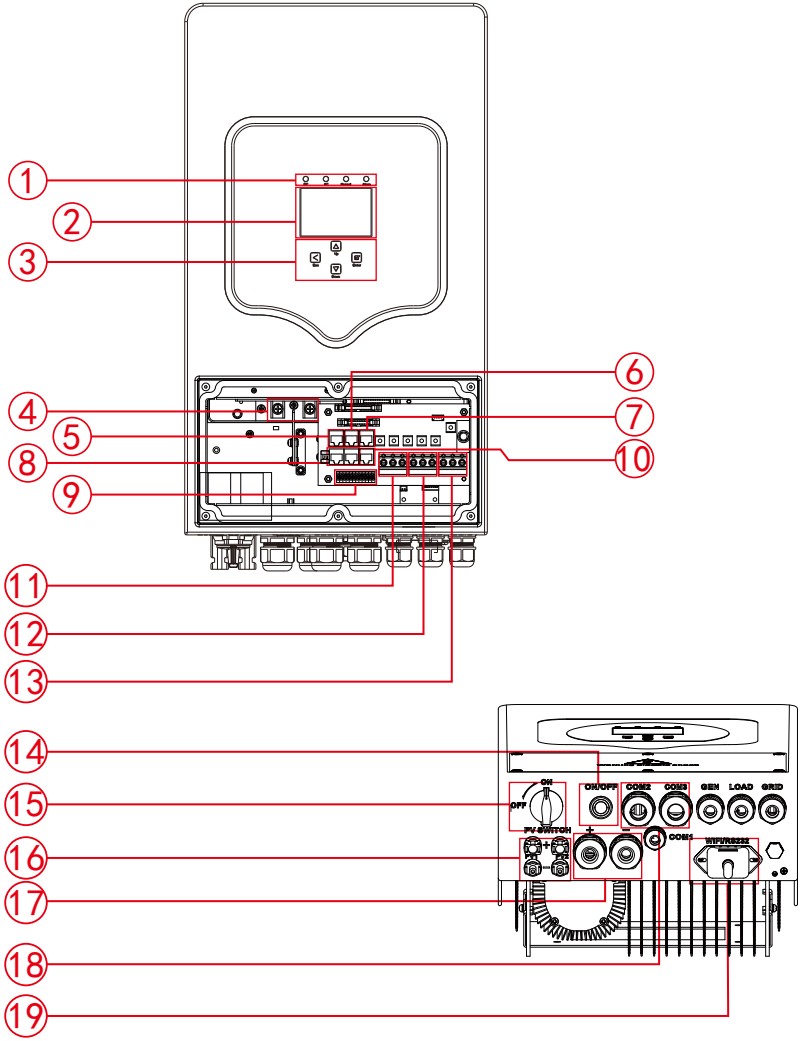

1: Inverter Indicators

2: LCD display

3: Function Buttons

4: Battery input connectors

5: BMS 485 Port

6: BMS CAN Port

7: DRMs Port

8: Parallel port

9: Function Port

10: RS 485 Port

11: Generator input

12: Load

13: Grid

14: Power on/off button

15: DC Switch

16: PV input with two MPPT

17: Battery

18: Temperature sensor

19: WiFi Interface

20: fan (*Note: For some hardware version, it doesn't have this fan)

2.2 Product Size

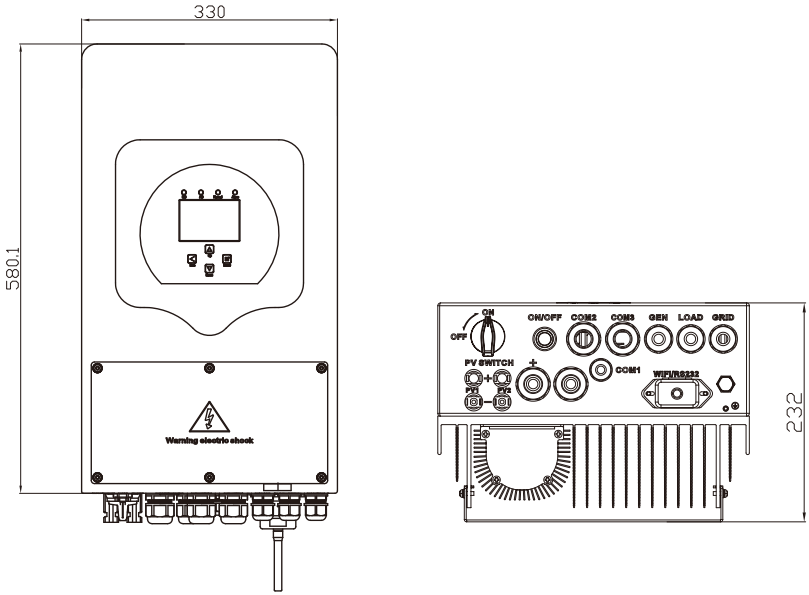

Inverter Size

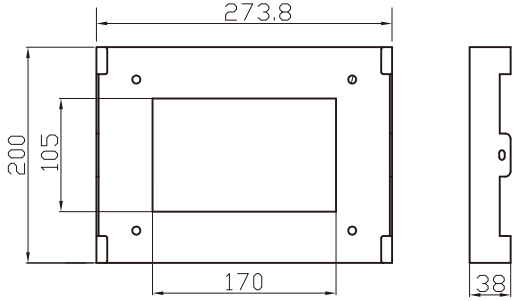

Mounting bracket

2.3 Product Features

- Self-consumption and feed-in to the grid.
- Auto restart while AC is recovering.
- Programmable supply priority for battery or grid.
- Programmable multiple operation modes: On grid, off grid and UPS.
- Configurable battery charging current/voltage based on applications by LCD setting.
- Configurable AC/Solar/Generator Charger priority by LCD setting.
- Compatible with mains voltage or generator power.
- Overload/over temperature/short circuit protection.
- Smart battery charger design for optimized battery performance
- With limit function, prevent excess power overflow to the grid.
- Supporting WIFI monitoring and build-in 2 strings of MPP trackers
- Smart settable three stages MPPT charging for optimized battery performance.
- Time of use function.
- Smart Load Function.

2.4 Basic System Architecture

The following illustration shows basic application of this inverter.
It also includes following devices to have a Complete running system.
- Generator or Utility
- PV modules

Consult with your system integrator for other possible system architectures depending on your requirements.
This inverter can power all kinds of appliances in home or office environment, including motor type appliances such as refrigerator and air conditioner.

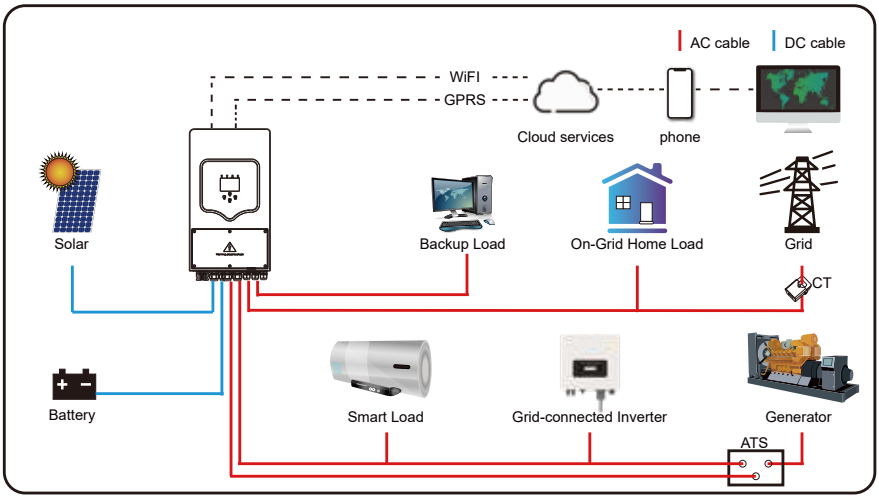

3. Installation

3.1 Parts List

Check the equipment before installation. Please make sure nothing is damaged in the package. You should have received the items in the following package:

Hybrid inverter x1

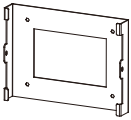

Wall mounting bracket x1

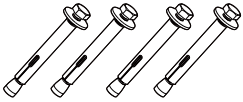

SStainless steel anti-collision bolt M6*60x4

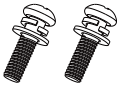

Stainless steel mounting screws M4*12x2

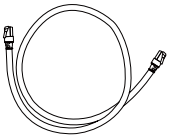

Parallel communication cable x1

L-type Hexagon wrench x1

User manual x1

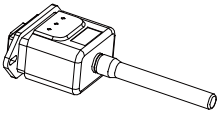

Wi-Fi-Plug (optional) x1

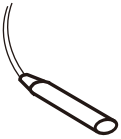

Battery temperature sensor x1

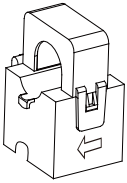

Sensor Clamp x 1

3.2 Mounting instructions

Installation Precaution

This Hybrid inverter is designed for outdoor use(IP65), Please make sure the installation site meets below conditions:

· Not in direct sunlight
· Not in areas where highly flammable materials are stored.
· Not in potential explosive areas.
· Not in the cool air directly.
· Not near the television Antenna or antenna cable.
· Not higher than altitude of about 2000 meters above sea level.
· Not in environment of precipitation or humidity(>95%)

Please AVOID direct sunlight, rain exposure, snow laying up during installation and operation. Before connecting all wires, please take off the metal cover by removing screws as shown below:

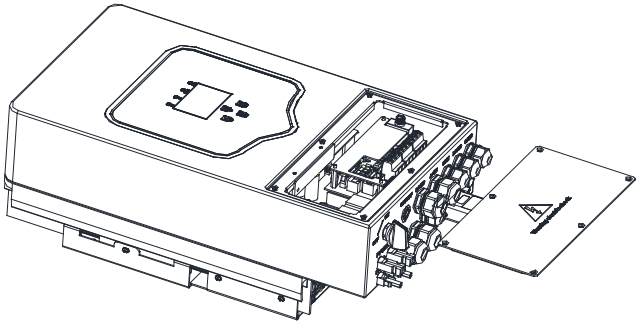

Considering the following points before selecting where to install:

· Please select a vertical wall with load-bearing capacity for installation, suitable for installation on concrete or other non-flammable surfaces,installation is shown below.
· Install this inverter at eye level in order to allow the LCD display to be read at all times.
· The ambient temperature should be between -25~60℃ to ensure optimal operation.
· Be sure to keep other objects and surfaces as shown in the diagram to guarantee sufficient heat dissipation and have enough space for removing wires.

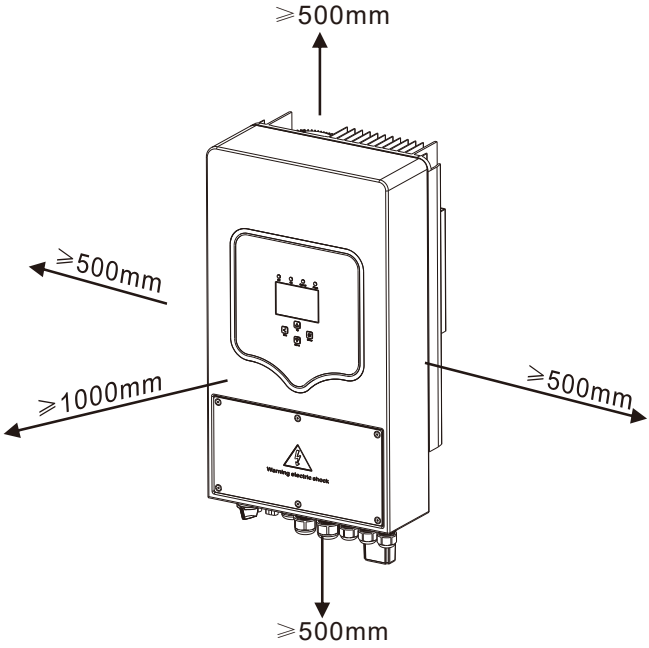

For proper air circulation to dissipate heat, allow a clearance of approx. 50cm to the side and approx. 50cm above and below the unit. And 100cm to the front.

Mounting the inverter

Remember that this inverter is heavy! Please be careful when lifting out from the package.
Choose the recommend drill head(as shown in below pic) to drill 4 holes on the wall, 52-60mm deep.

1. Use a proper hammer to fit the expansion bolt into the holes.
2. Carry the inverter and holding it, make sure the hanger aim at the expansion bolt,fix the inverter on the wall.
3. Fasten the screw head of the expansion bolt to finish the mounting.

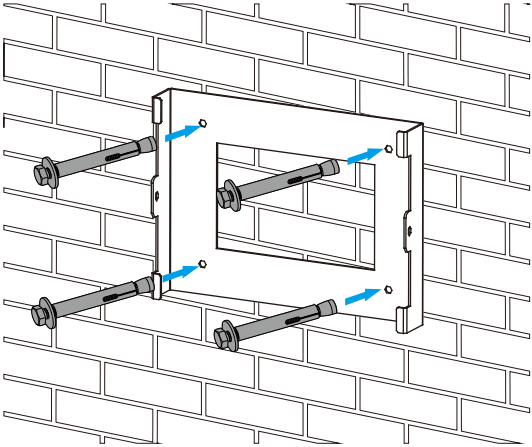

Inverter hanging plate installation

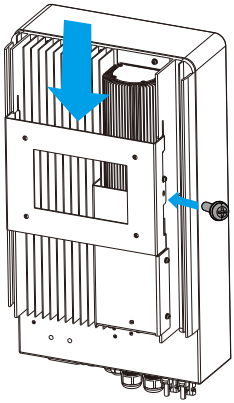

3.3 Battery connection

For safe operation and compliance, a separate DC over-current protector or disconnect device is required between the battery and the inverter. In some applications, switching devices may not be required but over-current protectors are still required. Refer to the typical amperage in the table below for the required fuse or circuit breaker size.

Model	*Wire Size*	*Cable(mm^2)*	*Torque value(max)*
3.6/5Kw	3AWG	25	5.2Nm
6Kw	2AWG	35	5.2Nm

Chart 3-2 Cable size

All wiring must be performed by a professional person.

Connecting the battery with a suitable cable is important for safe and efficient operation of the system. To reduce the risk of injury, refer to Chart 3-2 for recommended cables.

Please follow below steps to implement battery connection:

1. Please choose a suitable battery cable with correct connector which can well fit into the battery terminals.
2. Use a suitable screwdriver to unscrew the bolts and fit the battery connectors in, then fasten the bolt by the screwdriver, make sure the bolts are tightened with torque of 5.2 N.M in clockwise direction.
3. Make sure polarity at both the battery and inverter is correctly connected.

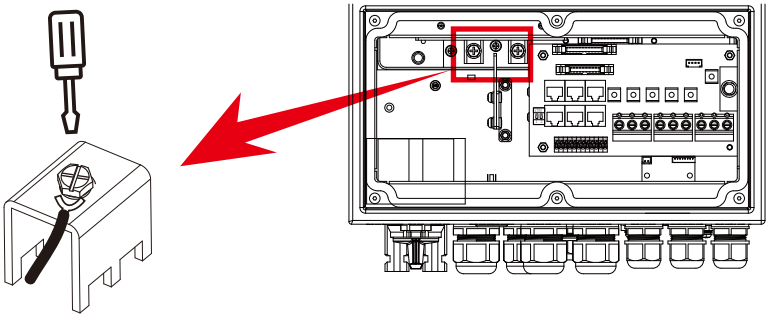

For 3.6KW/5KW/6KW model, battery connector screw size: M6

4. In case of children touch or insects go into the inverter, Please make sure the inverter connector is fasten to waterproof position by twist it clockwise.

Installation must be performed with care.

Before making the final DC connection or closing DC breaker/disconnect, be sure positive(+) must be connect to positive(+) and negative(-) must be connected to negative(-). Reverse polarity connection on battery will damage the inverter.

3.3.2 Function port definition

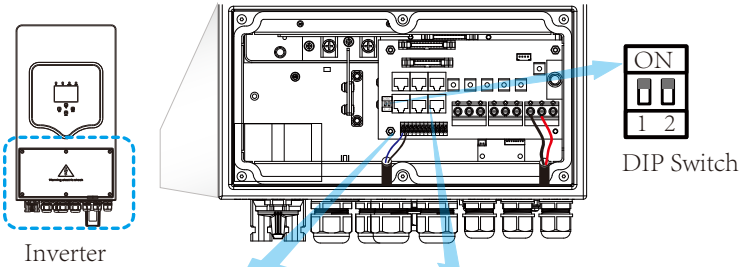

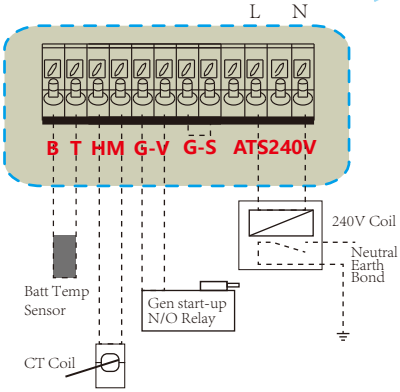

BT: battery temperature sensor for lead acid battery.

HM: current transformer for "zero export to CT" mode.

GV/GS: dry contact signal for startup the diesel generator.
When the "GEN signal" is active, the open contact (GV/GS) will switch on (no voltage output). If the "Signal ISLAND MODE"is ticked, the GS port will be the dry contact signal for startup the diesel generator.If "Signal ISLAND MODE" is not ticked, the GV port will be the dry contact signal for startup the diesel generator.

ATS: 230V output port when inverter is on.

DIP switch: Parallel communication resistor
If the number of inverters in the parallel system is less than or equal to 6, all inverter's DIP switch (1&2) need be ON position.
If the number of inverters in parallel system exceeds 6, the main 6pcs inverter's DIP switch needs to be ON position. And the other inverter DIP switch (1&2) needs to be OFF position.

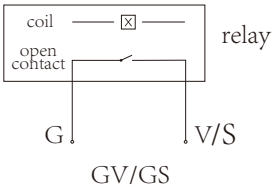

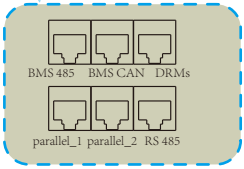

BMS 485: RS485 port for battery communication.
BMS CAN: CAN port for battery communication.
DRMs: for Australia market only.
Parallel 1: Parallel communication port 1 (CAN interface).
Parallel 2: Parallel communication port 2 (CAN interface).
*RS485: for energy meter communication.
*Some hardware versions don't have this port.

3.3.3 Temperature sensor connection for lead-acid battery

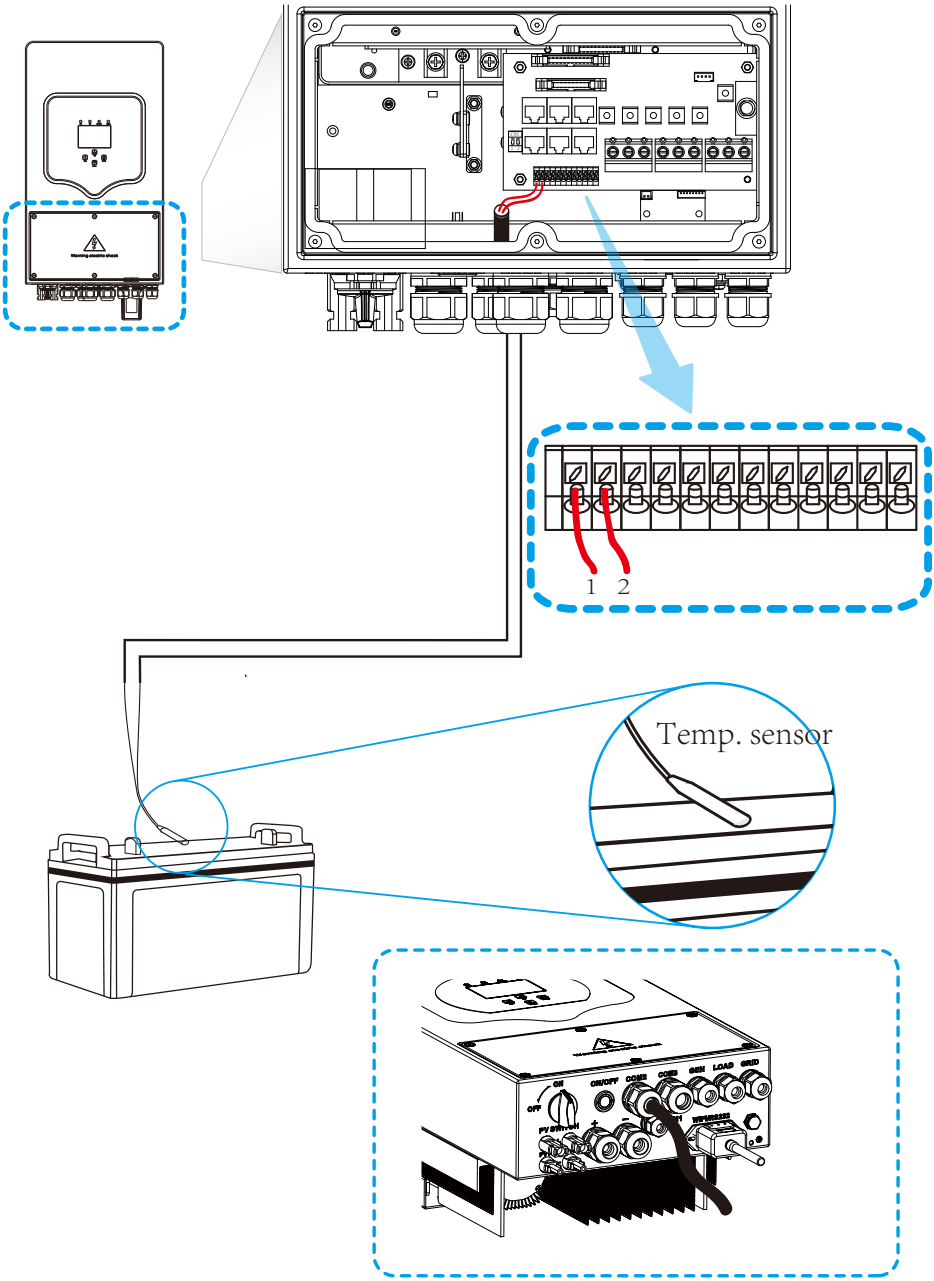

3.4 Grid connection and backup load connection

· Before connecting to grid, please install a separate AC breaker between inverter and grid. Also, it is recommended that installs an AC breaker between backup load and inverter.This will ensure the inverter can be securely disconnected during maintenance and fully protected from over current. For the 3.6/5/6KW model, the recommended AC breaker for backup load is 32A/40A. For the 3.6/5/6KW model, the recommended AC breaker for grid is 40A.

· There are three terminal blocks with "Grid" "Load"and "GEN" markings. Please do not misconnect input and output connectors.

All wiring must be performed by a qualified personnel.It is very important for system safety and efficient operation to use appropriate cable for AC input connection. To reduce risk of injury, please use the proper recommended cable as below.

Model	*Wire Size*	*Cable(mm²)*	*Torque value(max)*
3.6Kw	12AWG	4	1.2Nm
5Kw	10AWG	6	1.2Nm
6Kw	8AWG	8	1.2Nm

Chart 3-3 Recommended Size for AC wires

Please follow below steps to implement AC input/output connection:

1. Before making Grid, load and Gen port connection, be sure to turn off AC baeaker or disconnector first.
2. Remove insulation sleeve 10mm length, unscrew the bolts, insert the wires according to polarities indicated on the terminal block and tighten the terminal screws. Make sure the connection is complete.

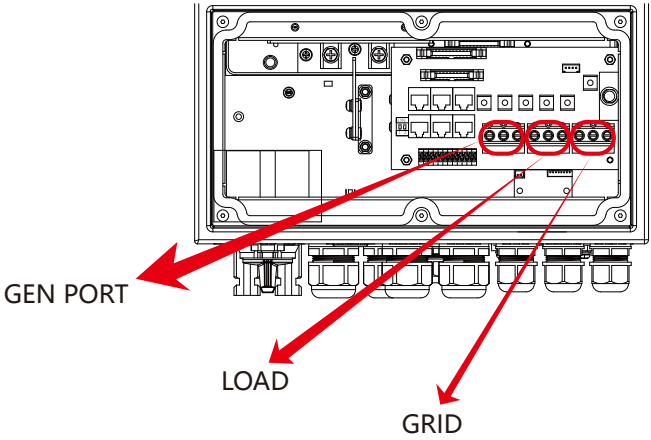

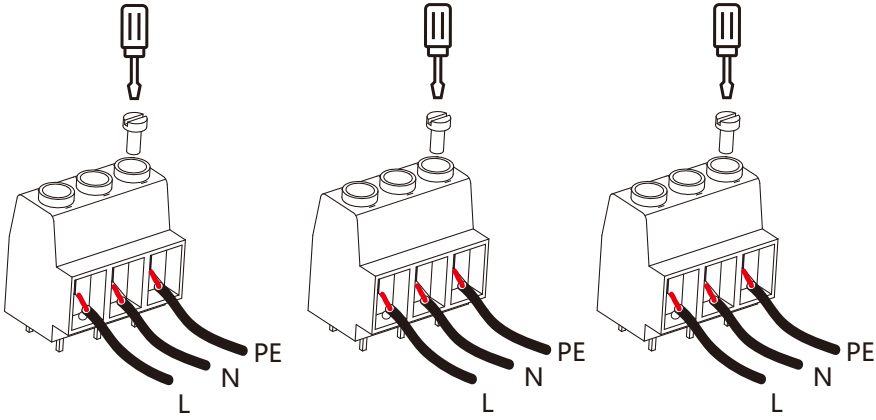

GEN PORT LOAD GRID

Be sure that AC power source is disconnected before attempting to wire it to the unit.

3. Then, insert AC output wires according to polarities indicated on the terminal block and tighten terminal. Be sure to connect corresponding N wires and PE wires to related terminals as well.
4. Make sure the wires are securely connected.
5. Appliances such as air conditioner are required at least 2-3 minutes to restart because it is required to have enough time to balance refrigerant gas inside of circuit. If a power shortage occurs and recovers in short time, it will cause damage to your connected appliances. To prevent this kind of damage, please check manufacturer of air conditioner if it is equipped with time-delay function before installation. Otherwise, this inverter will trigger overload fault and cut off output to protect your appliance but sometimes it still causes internal damage to the air conditioner

3.5 PV Connection

Before connecting to PV modules, please install a separately DC circuit breaker between inverter and PV modules. It is very important for system safety and efficient operation to use appropriate cable for PV module connection. To reduce risk of injury, please use the proper recommended cable size as below.

Model	***Wire Size***	***Cable(mm²)***
3.6/5/6Kw	12AWG	4

Chart 3-4 Cable size

To avoid any malfunction, do not connect any PV modules with possible current leakage to the inverter. For example, grounded PV modules will cause current leakage to the inverter. When using PV modules, please be sure PV+ don't ground and PV- don't ground.

It is requested to use PV junction box with surge protection. Otherwise, it will cause damage on inverter when lightning occurs on PV modules.

3.5.1 PV Module Selection:

When selecting proper PV modules, please be sure to consider below parameters:

1) Open circuit Voltage (Voc) of PV modules not exceeds max. PV array open circuit voltage of inverter.
2) Open circuit Voltage (Voc) of PV modules should be higher than min. start voltage.

Inverter Model	***3.6KW***	***5KW***	***6KW***
PV Input Voltage	370V (125V~500V)		
PV Array MPPT Voltage Range	150V-425V		
No. of MPP Trackers	2		
No. of Strings per MPP Tracker	1+1		

Chart 3-5

3.6 CT Connection

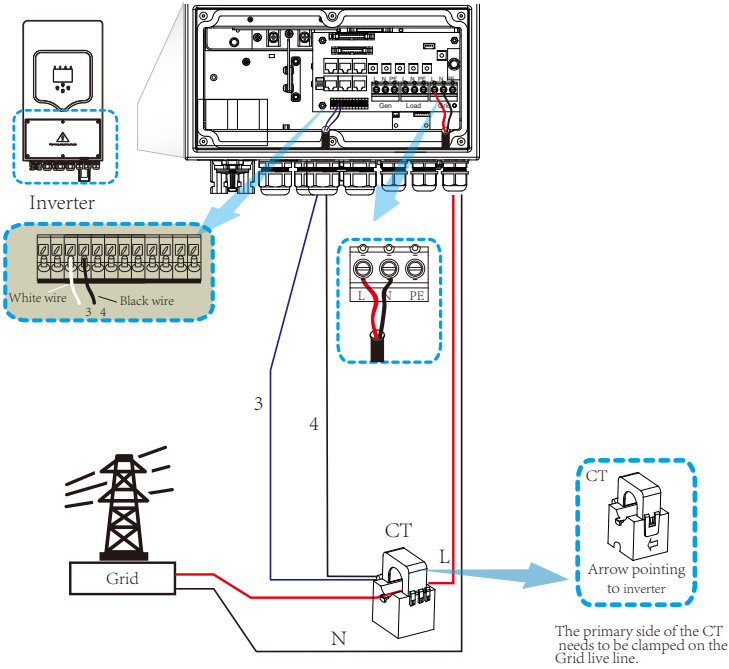

***Note： when the reading of the load power on the LCD is not correct, please reverse the CT arrow.**

3.6.1 Meter Connection

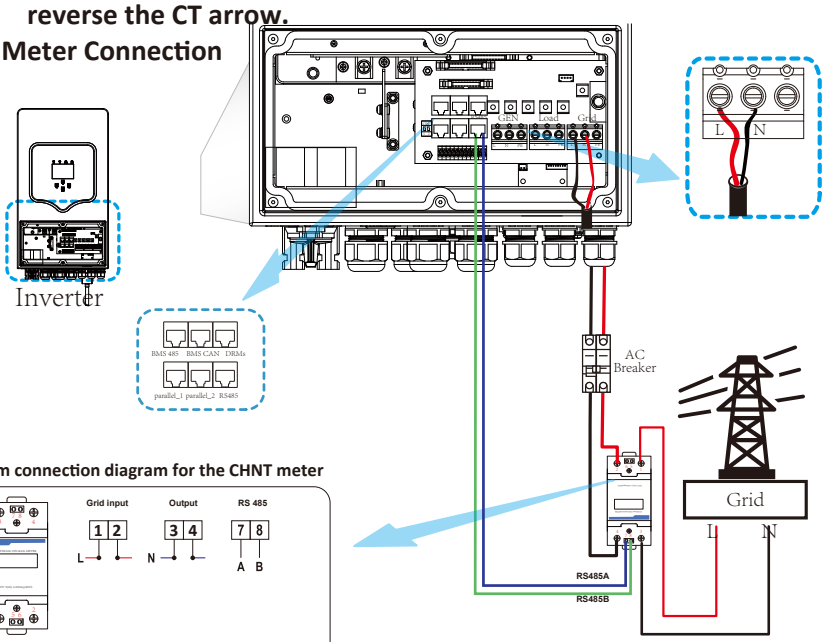

System connection diagram for the CHNT meter

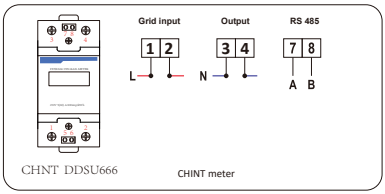

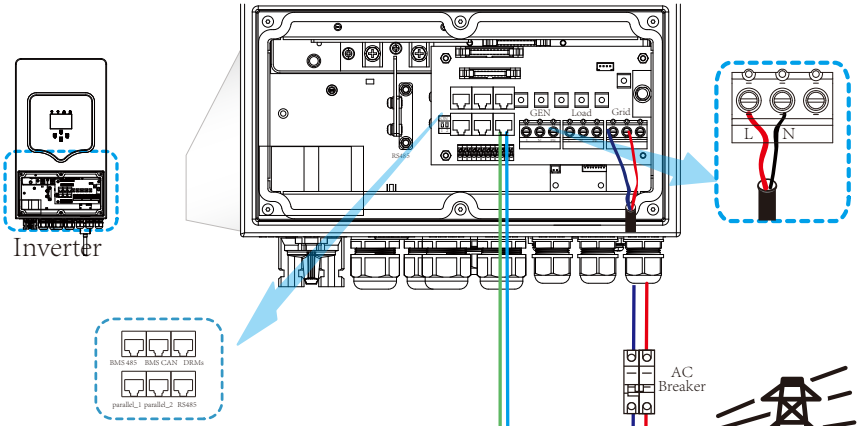

System connection diagram for the Eastron meter

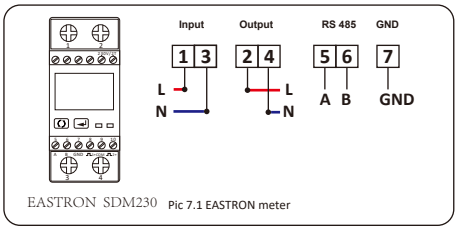

Pic 7.1 EASTRON meter

3.7 Earth Connection(mandatory)

Ground cable shall be connected to ground plate on grid side this prevents electric shock. if the original protective conductor fails.

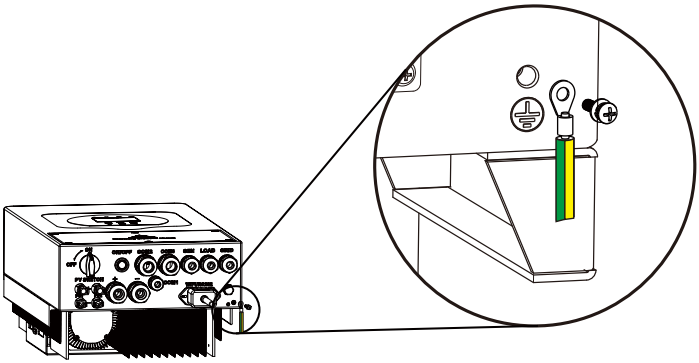

3.8 WIFI Connection

For the configuration of Wi-Fi Plug, please refer to illustrations of the Wi-Fi Plug.

3.9 Wiring System for Inverter

This diagram is an example for grid systems without special requirements on electrical wiring connection.
Note: The back-up PE line and earthing bar must be grounded properly and effectively.
Otherwise the back-up function may be abnormal when the grid fails.

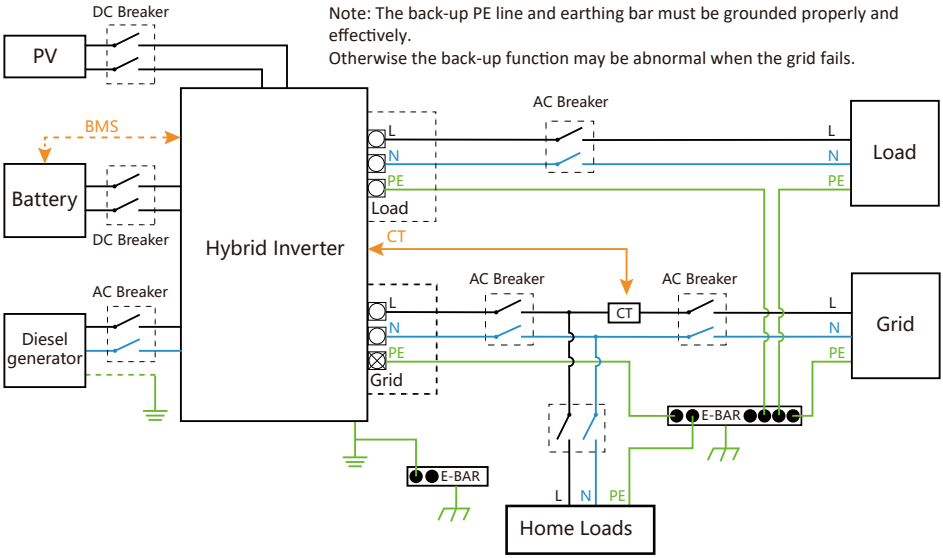

This diagram is an example for application that Neutral connects together with PE in distribution box.
Such as: Australia, New Zealand, South Africa, etc. (Please follow local wiring regulations!)

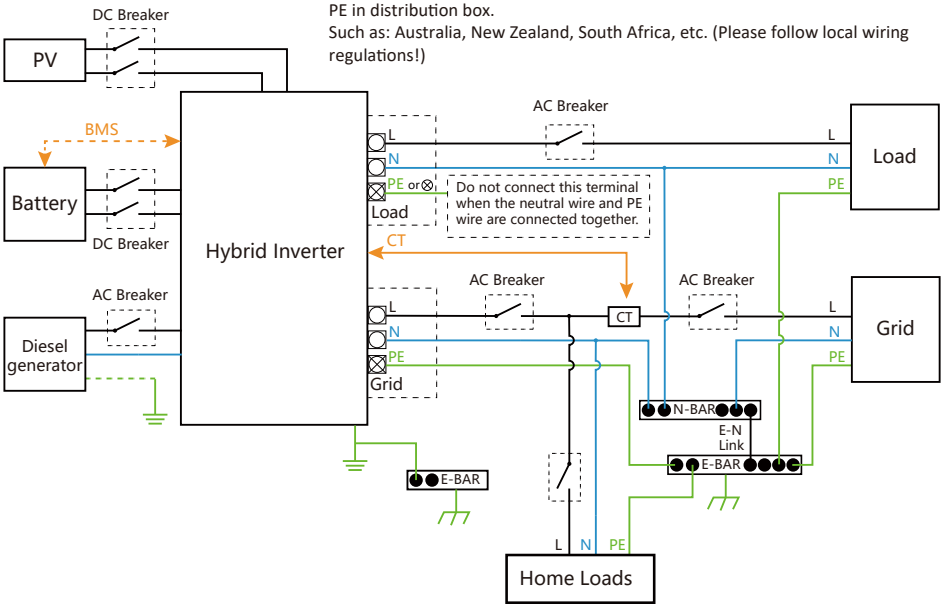

3.10 Typical application diagram of diesel generator

(Region:EU)

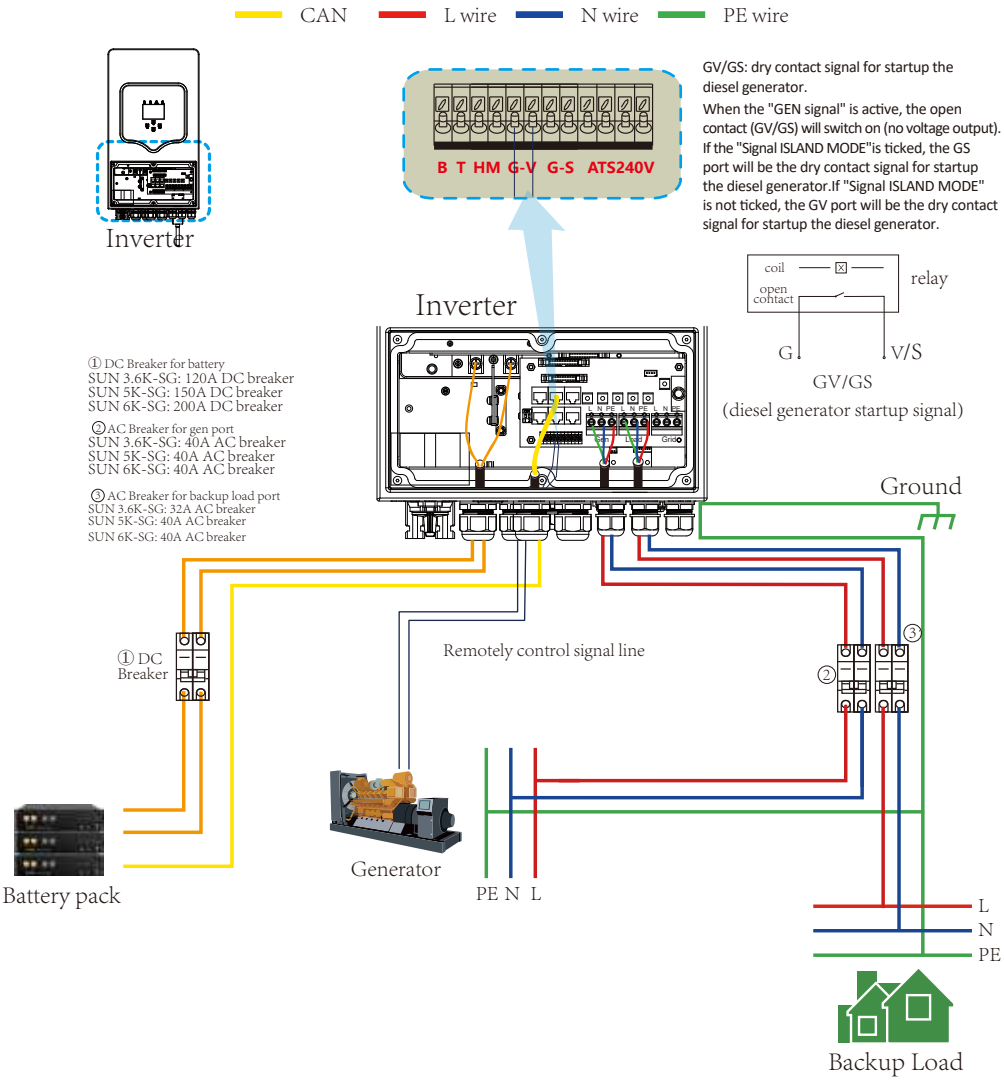

3.11 Single phase parallel connection diagram

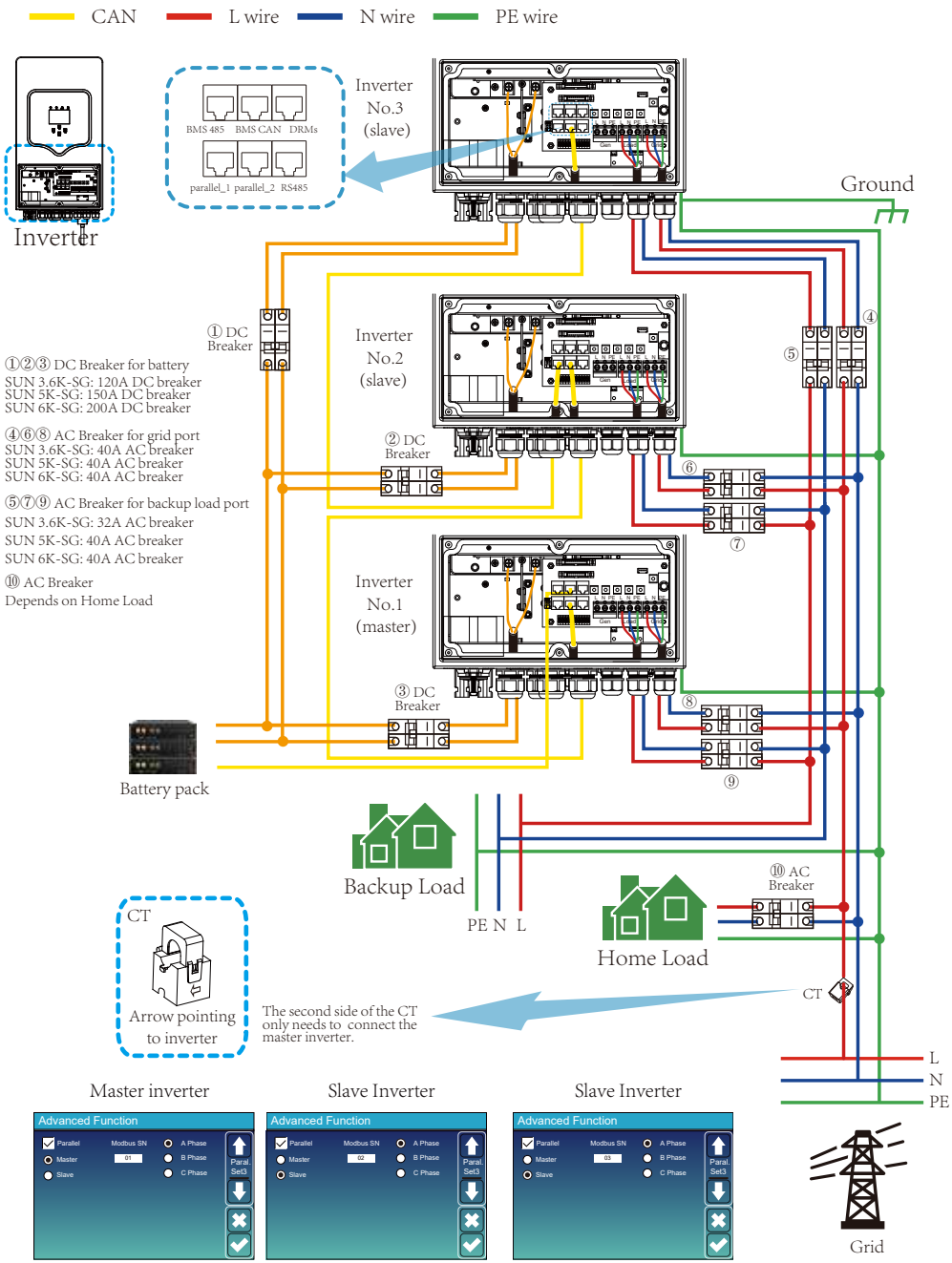

3.12 Three phase Parallel Inverter

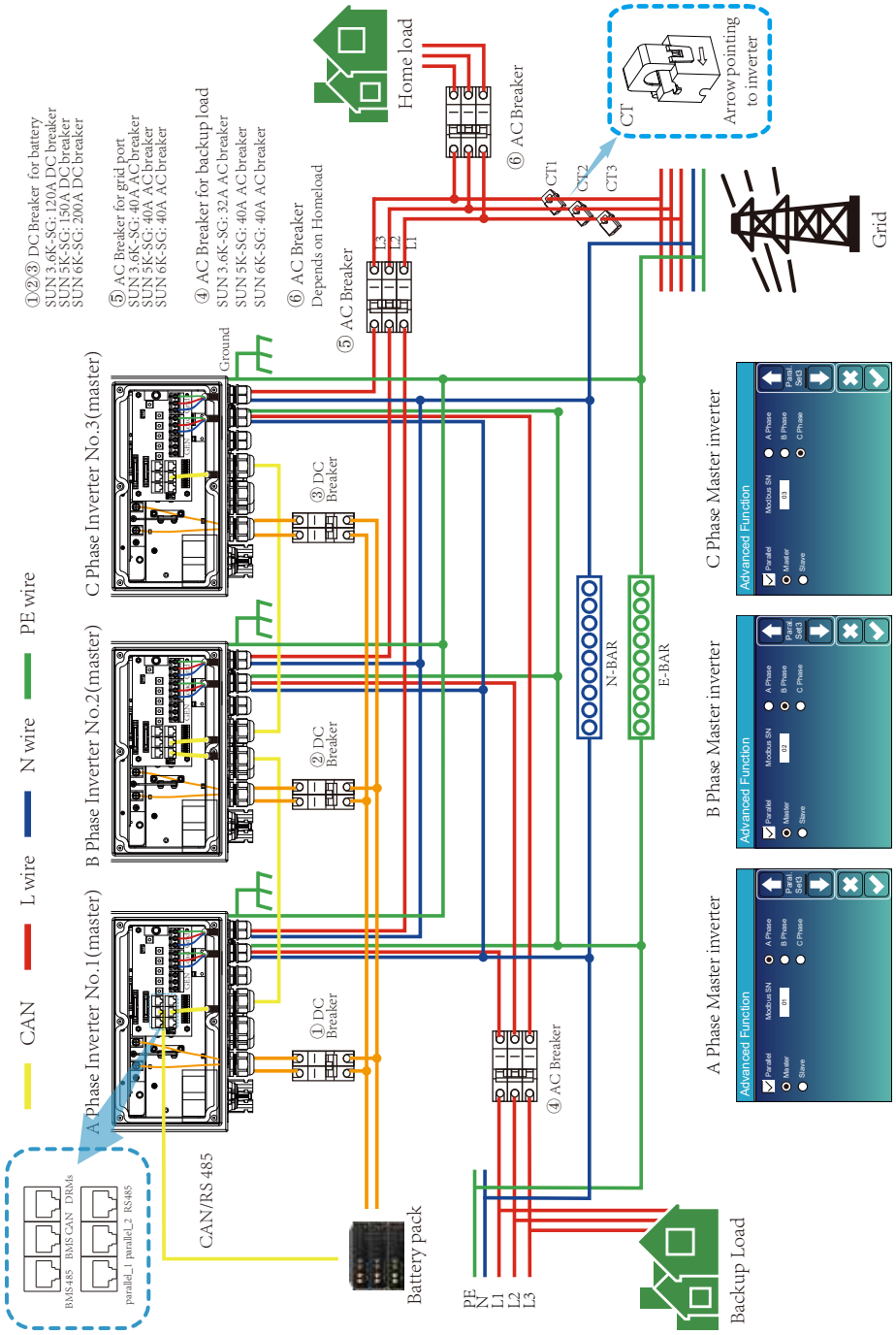

4. OPERATION

4.1 Power ON/OFF

Once the unit has been properly installed and the batteries are connected well, simply press On/Off button(located on the left side of the case) to turn on the unit.When system without battery connected, but connect with either PV or grid, and ON/OFF button is switched off, LCD will still light up(Display will show OFF), In this condition, when switch on ON/OFF button and select NO battery, system can still work.

4.2 Operation and Display Panel

The operation and display panel, shown in below chart, is on the front panel of the inverter. It includes four indicators, four function keys and a LCD display, indicating the operating status and input/output power information.

LED Indicator		***Messages***
DC	Green led solid light	PV Connection normal
AC	Green led solid light	Grid Connection normal
Normal	Green led solid light	Inverter operating normal
Alarm	Red led solid light	Malfunction or warning

Chart 4-1 LED indicators

Function Key	***Description***
Esc	To exit setting mode
Up	To go to previous selection
Down	To go to next selection
Enter	To confirm the selection

Chart 4-2 Function Buttons

5. LCD Display Icons

5.1 Main Screen

The LCD is touchscreen, below screen shows the overall information of the inverter.

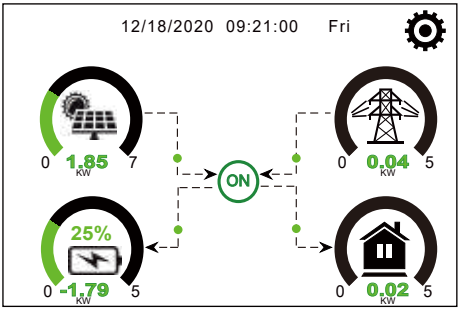

1.The icon in the center of the home screen indicates that the system is Normal operation. If it turns into "comm./FXX" , it means the inverter has communication errors or other errors, the error message will display under this icon(FXX errors, detail error info can be viewed in the System Alarms menu).

2.At the top of the screen is the time.

3.System Setup Icon, Press this set button,you can enter into the system setup screen which including Basic Setup, Battery Setup, Grid Setup, System Work Mode, Generator port use, Advanced function and Li-Batt info.

4.The main screen showing the info including Solar, Grid, Load and Battery. Its also displaying the energy flow direction by arrow. When the power is approximate to high level, the color on the panels will changing from green to red so system info showing vividly on the main screen.

· PV power and Load power always keep positive.
· Grid power negative means sell to grid, positive means get from grid.
· Battery power negative means charge, positive means discharge.

5.1.1 LCD operation flow chart

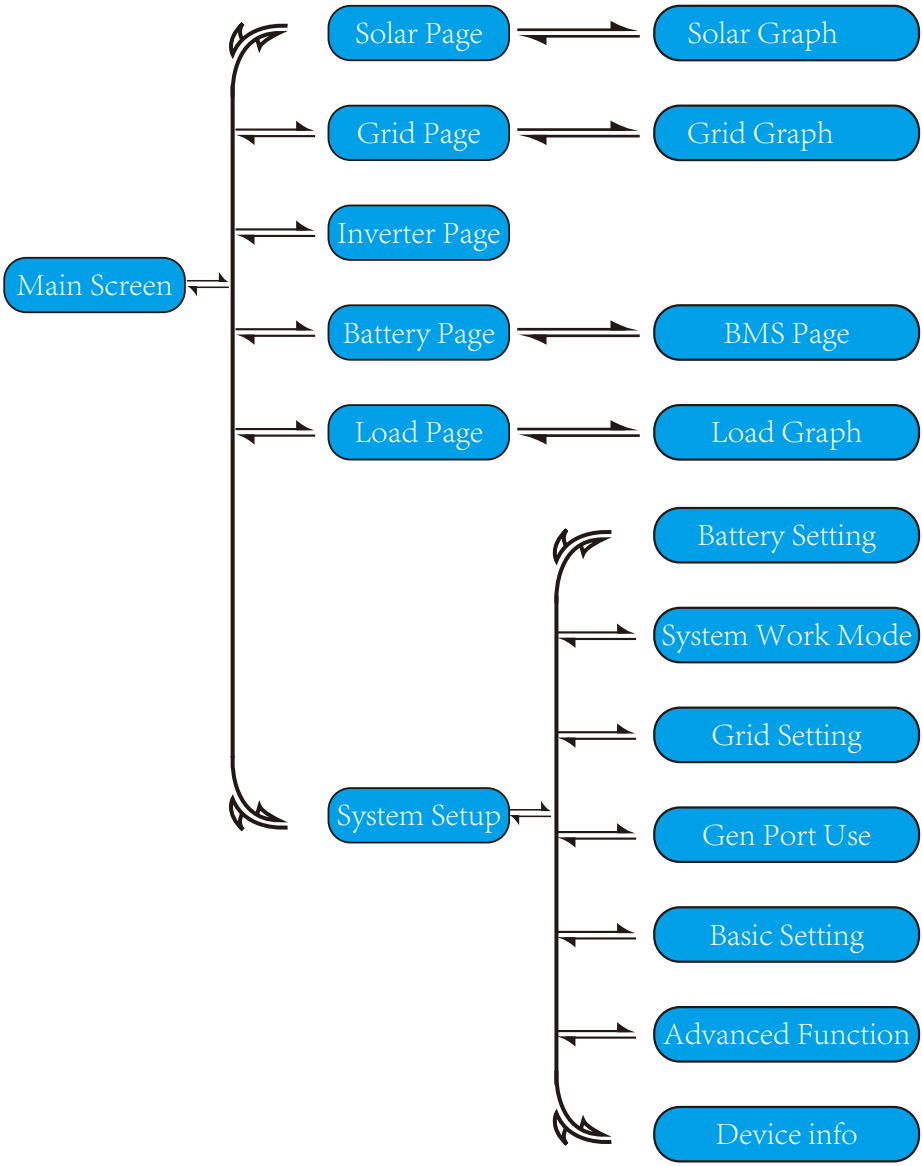

5.2 Solar Power Curve

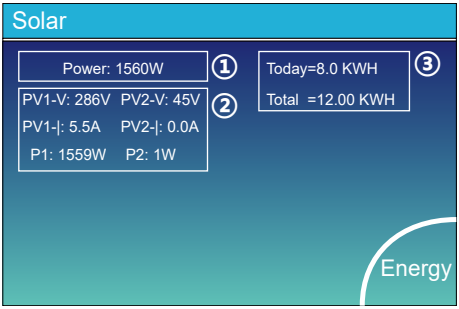

This is Solar Panel detail page.

① Solar Panel Generation.
② Voltage, Current, Power for each MPPT.
③ Solar Panel energy for Day and Total.

Press the "Energy "button will enter into the power curve page.

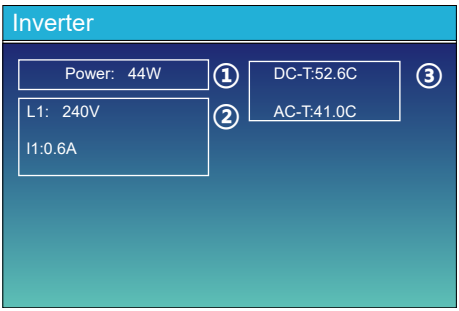

This is Inverter detail page.

① Inverter Generation.
② Voltage, Current, Power for each Phase.
③ *DC-T: mean DC-DC temperature,
AC-T: mean Heat-sink temperature.
*Note: this part info is not avaiable for some LCD FW.

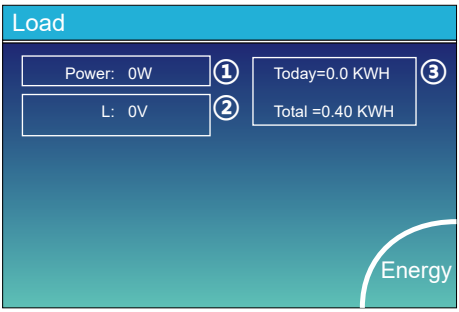

This is Back-up Load detail page.

① Back-up Power.
② Voltage, Power for each Phase.
③ Back-up consumption for Day and Total.

Press the "Energy " button will enter into the power curve page.

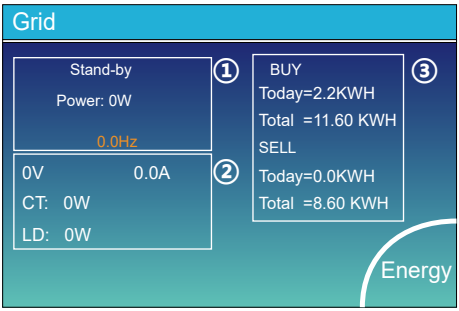

This is Grid detail page.

① Status, Power, Frequency.
② L: Voltage for each Phase
CT: Power detected by the external current sensors
LD: Power detected using internal sensors on AC grid in/out breaker
③ BUY: Energy from Grid to Inverter,
SELL: Energy from Inverter to grid.

Press the "Energy " button will enter into the power curve page.

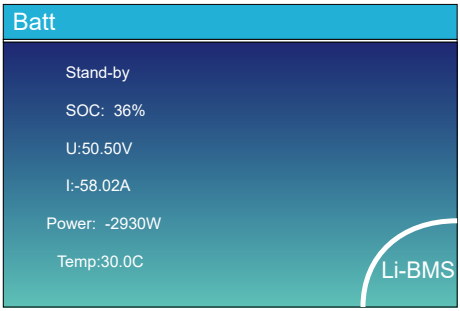

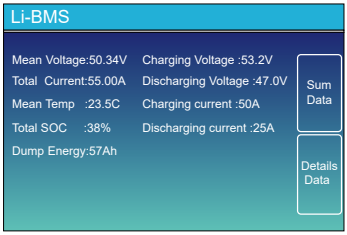

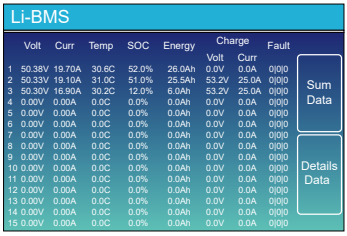

	Volt	Curr	Temp	SOC	Energy	Charge Volt	Charge Curr	Fault
1	50.38V	19.70A	30.6C	52.0%	26.0Ah	0.0V	0.0A	0|0|0
2	50.33V	19.10A	31.0C	51.0%	25.5Ah	53.2V	25.0A	0|0|0
3	50.30V	16.90A	30.2C	12.0%	6.0Ah	53.2V	25.0A	0|0|0
4	0.00V	0.00A	0.0C	0.0%	0.0Ah	0.0V	0.0A	0|0|0
5	0.00V	0.00A	0.0C	0.0%	0.0Ah	0.0V	0.0A	0|0|0
6	0.00V	0.00A	0.0C	0.0%	0.0Ah	0.0V	0.0A	0|0|0
7	0.00V	0.00A	0.0C	0.0%	0.0Ah	0.0V	0.0A	0|0|0
8	0.00V	0.00A	0.0C	0.0%	0.0Ah	0.0V	0.0A	0|0|0
9	0.00V	0.00A	0.0C	0.0%	0.0Ah	0.0V	0.0A	0|0|0
10	0.00V	0.00A	0.0C	0.0%	0.0Ah	0.0V	0.0A	0|0|0
11	0.00V	0.00A	0.0C	0.0%	0.0Ah	0.0V	0.0A	0|0|0
12	0.00V	0.00A	0.0C	0.0%	0.0Ah	0.0V	0.0A	0|0|0
13	0.00V	0.00A	0.0C	0.0%	0.0Ah	0.0V	0.0A	0|0|0
14	0.00V	0.00A	0.0C	0.0%	0.0Ah	0.0V	0.0A	0|0|0
15	0.00V	0.00A	0.0C	0.0%	0.0Ah	0.0V	0.0A	0|0|0

This is Battery detail page.

if you use Lithium Battery, you can enter BMS page.

5.3 Curve Page-Solar & Load & Grid

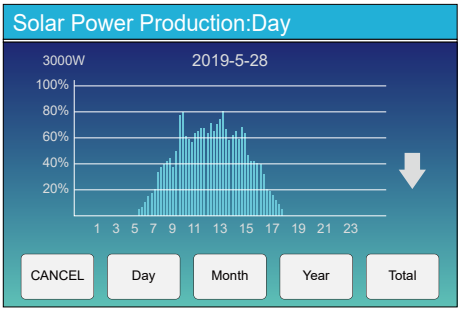

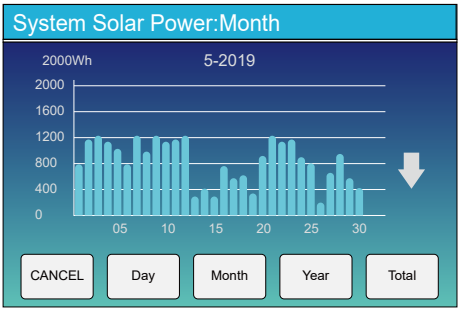

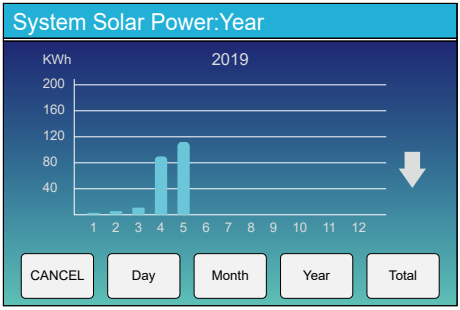

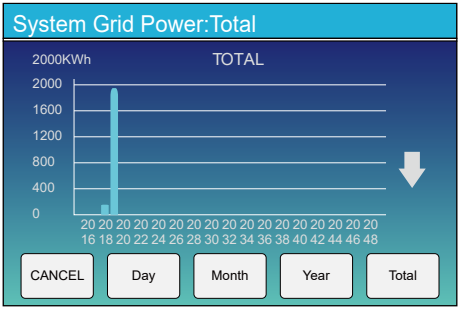

Solar power curve for daily, monthly, yearly and total can be roughly checked on the LCD, for more accuracy power generation, pls check on the monitoring system. Click the up and down arrow to check power curve of different period.

5.4 System Setup Menu

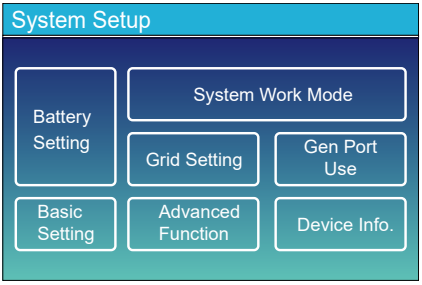

This is System Setup page.

5.5 Basic Setup Menu

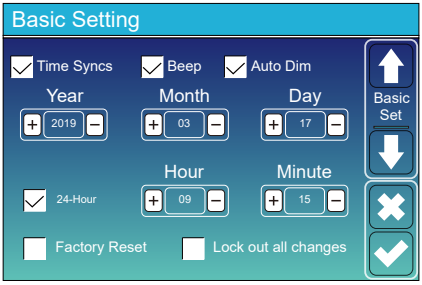

Factory Reset: Reset all parameters of the inverter.
Lock out all changes: Enable this menu for setting parameters that require locking and cannot be set up. Before performing a successful factory reset and locking the systems, to keep all changes you need to type in a password to enable the setting.
The password for factory settings is 9999 and for lock out is 7777.

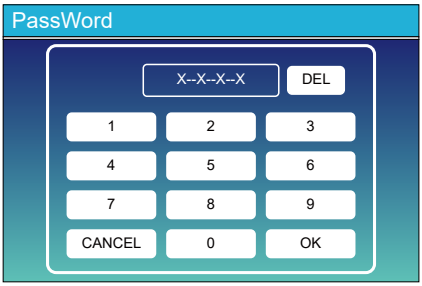

Factory Reset PassWork: 9999

Lock out all changes PassWork: 7777

System selfchek: After ticking this item, it needs input the password.
The default password is 1234

5.6 Battery Setup Menu

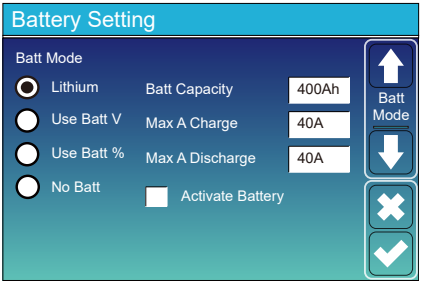

Battery capacity: it tells Deye hybrid inverter to know your battery bank size.

Use Batt V: Use Battery Voltage for all the settings (V).

Use Batt %: Use Battery SOC for all the settings (%).

Max. A charge/discharge: Max battery charge/discharge current(0-115A for 5KW model, 0-90A for 3.6KW model). For AGM and Flooded, we recommend Ah battery size x 20%= Charge/Discharge amps.
. For Lithium, we recommend Ah battery size x 50% = Charge/Discharge amps.
. For Gel, follow manufacturer' s instructions.

No Batt: tick this item if no battery is connected to the system.

Active battery: This feature will help recover a battery that is over discharged by slowly charging from the solar array or grid.

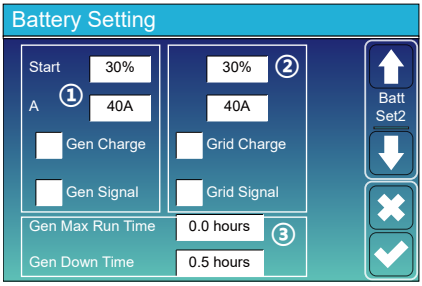

This is Battery Setup page. ① ③

Start =30%: Percent S.O.C at 30% system will AutoStart a connected generator to charge the battery bank.

A = 40A: Charge rate of 40A from the attached generator in Amps.

Gen Charge: uses the gen input of the system to charge battery bank from an attached generator.

Gen Signal: Normally open relay that closes when the Gen Start signal state is active.

Gen Max Run Time: It indicates the longest time Generator can run in one day, when time is up, the Generator will be turned off. 24H means that it does not shut down all the time.

Gen Down Time: It indicates the delay time of the Generator to shut down after it has reached the running time.

This is Grid Charge, you need select. ②

Start =30%: No use， Just for customization.

A = 40A: It indicates the Current that the Grid charges the Battery.

Grid Charge: It indicates that the grid charges the battery.

Grid Signal: Disable.

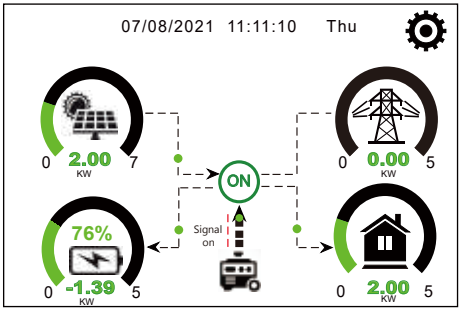

This page tells the PV and diesel generator power the load and battery.

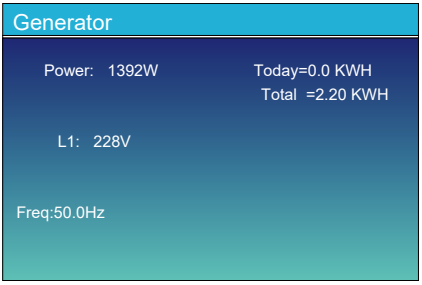

This page tells generator output voltage, frequency, power. And, how much energy is used from generator.

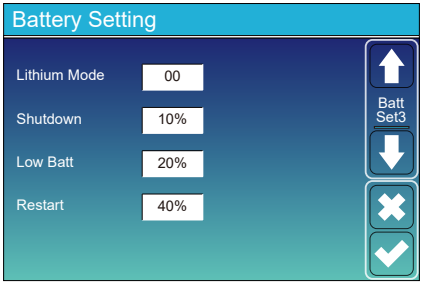

Lithium Mode: This is BMS protocol.Please reference the document(Approved Battery).

Shutdown 10%: It indicates the inverter will shutdown if the SOC below this value.

Low Batt 20%: It indicates the inverter will alarm if the SOC below this value.

Restart 40%: Battery voltage at 40% AC output will resume.

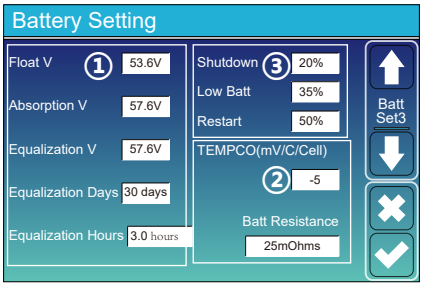

There are 3 stages of charging the Battery . ①

This is for professional installers, you can keep it if you do not know. ②

Shutdown 20%: The inverter will shutdown if the SOC below this value.

Low Batt 35%: The inverter will alarm if the SOC below this value. ③

Restart 50%: Battery SOC at 50% AC output will resume.

Recommended battery settings

Battery Type	*Absorption Stage*	*Float Stage*	*Torque value (every 30 days 3hr)*
AGM (or PCC)	14.2v (57.6v)	13.4v (53.6v)	14.2v(57.6v)
Gel	14.1v (56.4v)	13.5v (54.0v)	
Wet	14.7v (59.0v)	13.7v (55.0v)	14.7v(59.0v)
Lithium	Follow its BMS voltage parameters		

5.7 System Work Mode Setup Menu

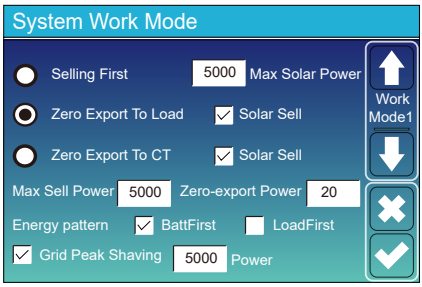

Work Mode

Selling First: This Mode allows hybrid inverter to sell back any excess power produced by the solar panels to the grid. If time of use is active, the battery energy also can be sold into grid.

The PV energy will be used to power the load and charge the battery and then excess energy will flow to grid.

Power source priority for the load is as follows:

1. Solar Panels.
2. Grid.
3. Batteries (until programable % discharge is reached).

Zero Export To Load: Hybrid inverter will only provide power to the backup load connected. The hybrid inverter will neither provide power to the home load nor sell power to grid. The built-in CT will detect power flowing back to the grid and will reduce the power of the inverter only to supply the local load and charge the battery.

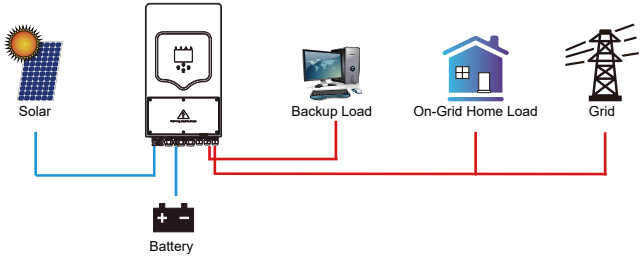

Zero Export To CT: Hybrid inverter will not only provide power to the backup load connected but also give power to the home load connected. If PV power and battery power is insufficient, it will take grid energy as supplement. The hybrid inverter will not sell power to grid. In this mode, a CT is needed. The installation method of the CT please refer to chapter 3.6 CT Connection. The external CT will detect power flowing back to the grid and will reduce the power of the inverter only to supply the local load, charge battery and home load.

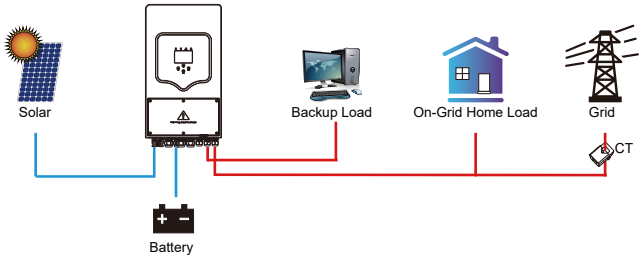

Solar Sell: “Solar sell” is for Zero export to load or Zero export to CT: when this item is active, the surplus energy can be sold back to grid. When it is active, PV Power source priority usage is as follows: load consumption and charge battery and feed into grid.

Max. sell power: Allowed the maximum output power to flow to grid.

Zero-export Power: for zero-export mode, it tells the grid output power. Recommend to set it as 20-100W to ensure the hybrid inverter won' t feed power to grid.

Energy Pattern: PV Power source priority.

Batt First: PV power is firstly used to charge the battery and then used to power the load. If PV power is insufficient, grid will make supplement for battery and load simultaneously.

Load First: PV power is firstly used to power the load and then used to charge the battery. If PV power is insufficient, grid will make supplement for battery and load simultaneously.

Max Solar Power: allowed the maximum DC input power.

Grid Peak-shaving: when it is active, grid output power will be limited within the set value. If the load power exceeds the allowed value, it will take PV energy and battery as supplement. If still can’t meet the load requirement, grid power will increase to meet the load needs.

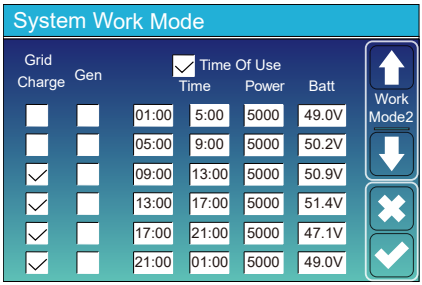

Time of use: it is used to program when to use grid or generator to charge the battery, and when to discharge the battery to power the load. Only tick "Time Of Use" then the follow items (Grid, charge, time, power etc.) will take effect.
Note: when in selling first mode and click time of use, the battery power can be sold into grid.
Grid charge: utilize grid to charge the battery in a time period.
Gen charge: utilize diesel generator to charge the battery in a time period.
Time: real time, range of 01:00-24:00.
Power: Max. discharge power of battery allowed.
Batt(V or SOC %): battery SOC % or voltage at when the action is to happen.

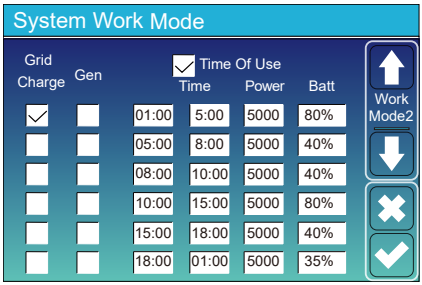

For example:

During 01:00-05:00, when battery SOC is lower than 80%, it will use grid to charge the battery until battery SOC reaches 80%.

During 05:00-08:00 and 08:00-10:00, when battery SOC is higher than 40%, hybrid inverter will discharge the battery until the SOC reaches 40%.

During 10:00-15:00, when battery SOC is higher than 80%, hybrid inverter will discharge the battery until the SOC reaches 80%.

During 15:00-18:00, when battery SOC is higher than 40%, hybrid inverter will discharge the battery until the SOC reaches 40%.

During 18:00-01:00, when battery SOC is higher than 35%, hybrid inverter will discharge the battery until the SOC reaches 35%.

5.8 Grid Setup Menu

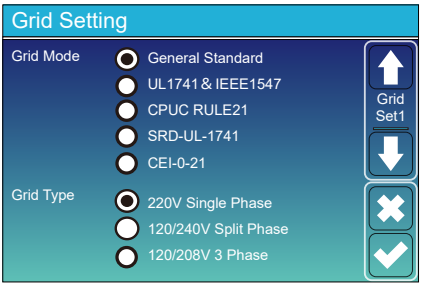

Please select the correct Grid Mode in your local area. If you are not sure, please choose General Standard.

Please select the correct Grid Type in your local area, otherwise the machine will not work or be damaged.

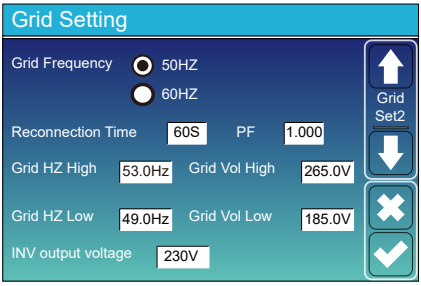

UL1741&IEEE1547，CPUC RULE21，SRD-UL-1741

No need to set the function of this interface.

General Standard

Please select the correct Grid Frequency in your local area.
You can hole this in default value.

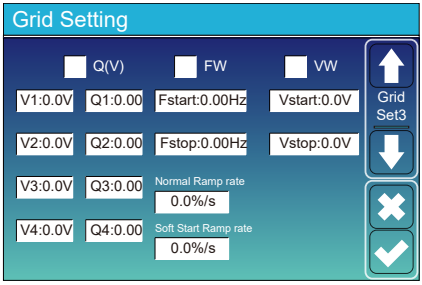

For California only.

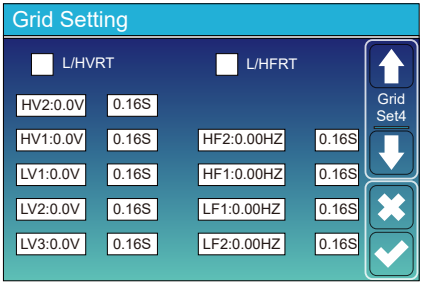

For California only.

5.9 The method of CEI-021 Standard Self-Check

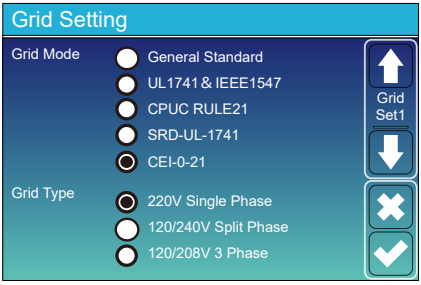

Firstly, tick the “CEI-021” and “220V single phase/50Hz” on the grid setting menu.

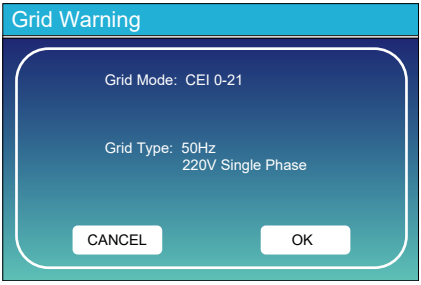

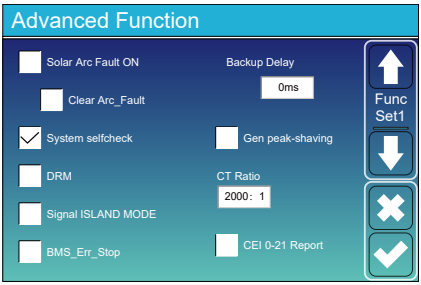

Secondly, tick “System selfchek” ,
then it will ask you input the password,
and the default password is 1234.

Note: please don’t tick “CEI-021 Report ”.

This “System selfcheck” program is valid only after choosing grid type as "CEI-021".

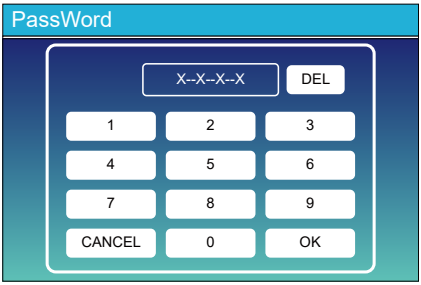

The default password is 1234
After input the password and then tick "OK"`

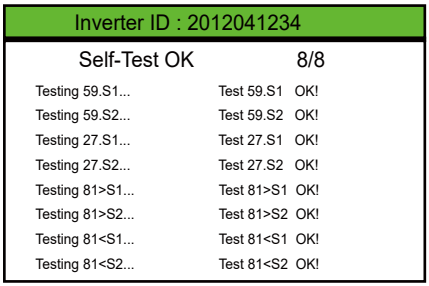

During the self-test process, all the indicators will be on and the alarm keeps on.

When all the test items shows OK, which means the self-test is completed successfully.

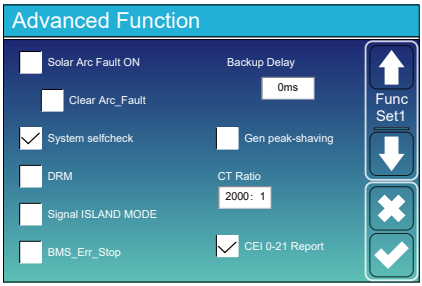

then press “esc” button to quit from this page.
Tick “system selfcheck”on the Advanced function menu and tick “CEI-021 Report”.

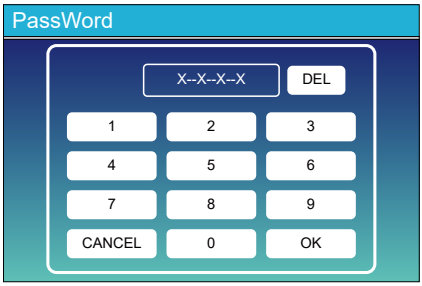

System selfchek: After ticking this item, it needs input the password.
The default password is 1234.
After input the password and then tick "OK"`

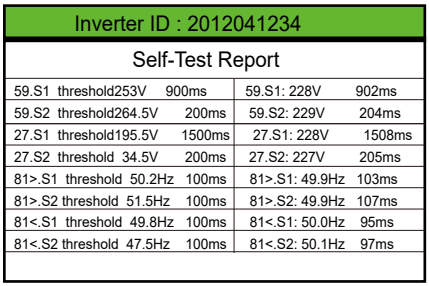

Inverter ID : 2012041234

Self-Test Report

59.S1 threshold253V	900ms	59.S1: 228V	902ms
59.S2 threshold264.5V	200ms	59.S2: 229V	204ms
27.S1 threshold195.5V	1500ms	27.S1: 228V	1508ms
27.S2 threshold 34.5V	200ms	27.S2: 227V	205ms
81>.S1 threshold 50.2Hz	100ms	81>.S1: 49.9Hz	103ms
81>.S2 threshold 51.5Hz	100ms	81>.S2: 49.9Hz	107ms
81<.S1 threshold 49.8Hz	100ms	81<.S1: 50.0Hz	95ms
81<.S2 threshold 47.5Hz	100ms	81<.S2: 50.1Hz	97ms

This page will shows the test result of "CEI-021 self-check".

5.10 Generator Port Use Setup Menu

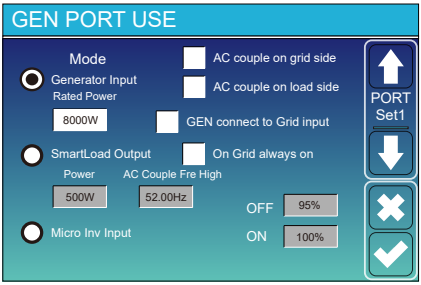

Generator input rated power: allowed Max. power from diesel generator.
GEN connect to grid input: connect the diesel generator to the grid input port.
Smart Load Output: This mode utilizes the Gen input connection as an output which only receives power when the battery SOC and PV power is above a user programmable threshold.
e.g. Power=500W, ON: 100%, OFF=95%: When the PV power exceeds 500W, and battery bank SOC reaches 100%, Smart Load Port will switch on automatically and power the load connected. When the battery bank SOC < 95% or PV power < 500w, the Smart Load Port will switch off automatically.

Smart Load OFF Batt
• Battery SOC at which the Smart load will switch off.
Smart Load ON Batt
• Battery SOC at which the Smart load will switch on. Also, the PV input power should exceed the setting value (Power) simultaneously and then the Smart load will switch on.
On Grid always on: When click "on Grid always on" the smart load will switch on when the grid is present.
Micro Inv Input: To use the Generator input port as a micro-inverter on grid inverter input (AC coupled), this feature will also work with "Grid-Tied" inverters.

* **Micro Inv Input OFF**: when the battery SOC exceeds setting value, Microinveter or grid-tied inverter will shut down.
* **Micro Inv Input ON**: when the battery SOC is lower than setting value, Microinveter or grid-tied inverter will start to work.

AC Couple Fre High: If choosing“Micro Inv input”, as the battery SOC reaches gradually setting value (OFF), During the process, the microinverter output power will decrease linear. When the battery SOC equals to the setting value (OFF), the system frequency will become the setting value (AC couple Fre high) and the Microinverter will stop working. Stop exporting power produced by the microinverter to the grid.

* **Note**: Micro Inv Input OFF and On is valid for some certain FW version only.
* **AC couple on load side**: connecting the output of on-grid inverter at the load port of the hybrid inverter. In this situation, the hybrid inverter will not able to show the load power correctly.
* **AC couple on grid side**: this function is reserved.
* **Note**: Some firmware versions don’t have this function.

5.11 Advanced Function Setup Menu

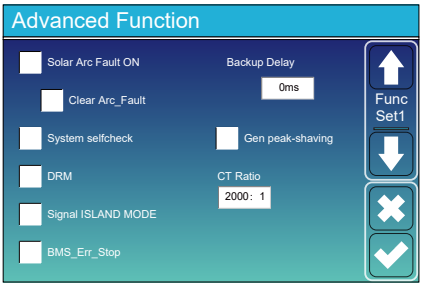

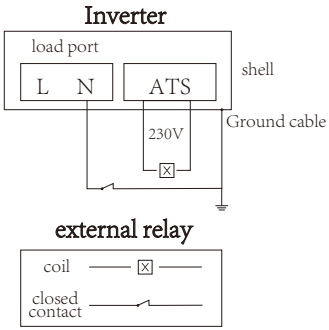

Solar Arc Fault ON: This is only for US.
System selfcheck: Disable. this is only for factory.
Gen Peak-shaving: Enable When the power of the generator exceeds the rated value of it, the inverter will provide the redundant part to ensure that the generator will not overload.
DRM: For AS4777 standard
Backup Delay: (0-300)S adjustable
BMS_Err_Stop: When it is active, if the battery BMS failed to communicate with inverter, the inverter will stop working and report fault.
Signal island mode: when the inverter connects grid, the ATS port will output 230Vac and it is used to cuts off Earth-Neutral(load port N line) bond via connect external relay. When the inverter disconnects from the grid, ATS port voltage will be 0 and the Earth-Neutral bond keeps on. More details, please refer to left picture.

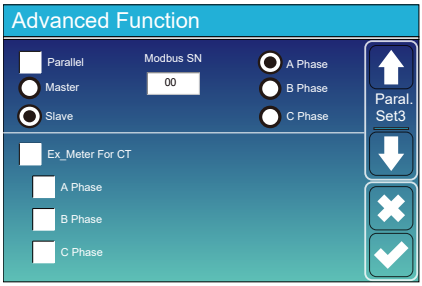

Ex_Meter For CT: when in Three phase system with CHNT Three phase energy meter (DTSU666), click corresponding phase where hybrid inverter is connected. e.g. when the hybrid inverter output connects to A phase, please click A Phase.

5.12 Device Info Setup Menu

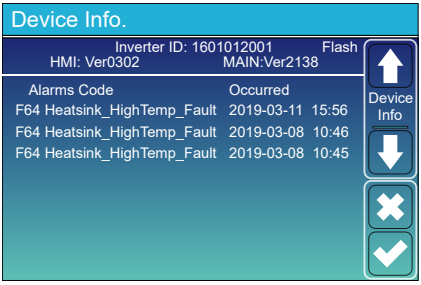

This page show Inverter ID, Inverter version and alarm codes.

HMI: LCD version

MAIN: Control board FW version

6. Mode

Mode I:Basic

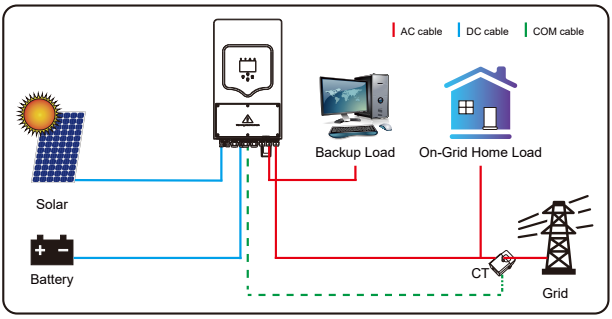

Mode II: With Generator

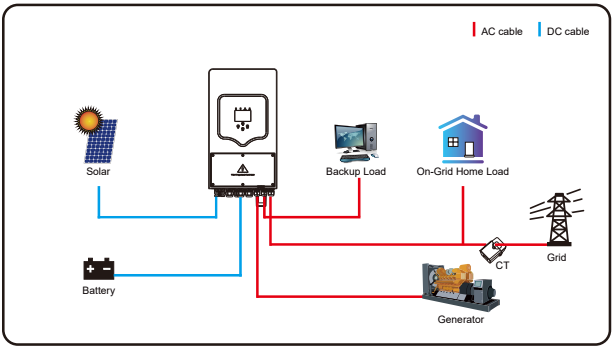

Mode III: With Smart-Load

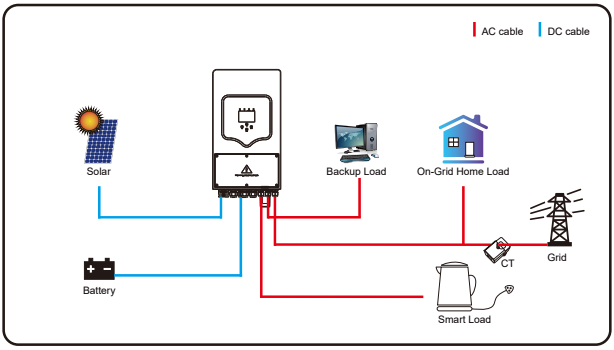

Mode IV: AC Couple

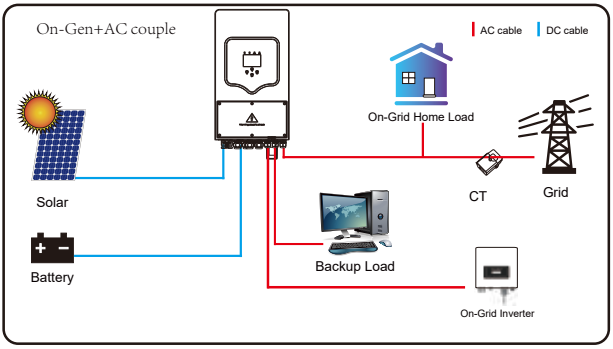

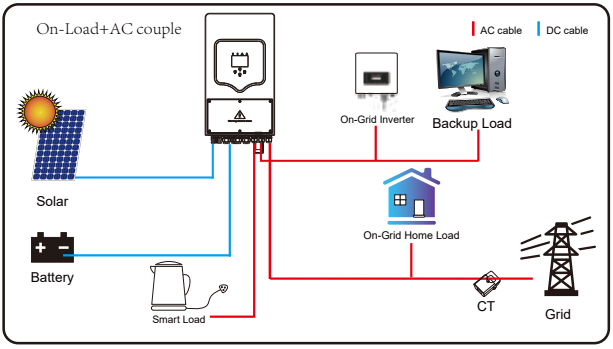

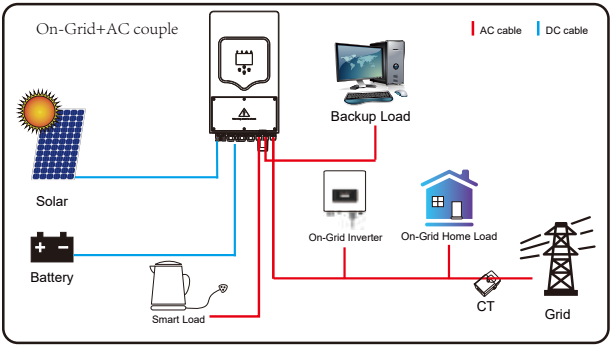

The 1st priority power of the system is always the PV power, then 2nd and 3rd priority power will be the battery bank or grid according to the settings. The last power backup will be the Generator if it is available.

7. Fault information and processing

The energy storage inverter is designed according to the grid-connected operation standard and meets the safety requirements and electromagnetic compatibility requirements. Before leaving the factory, the inverter undergoes several rigorous tests to ensure that the inverter can operate reliably.

If any of the fault messages listed in Table 7-1 appear on your inverter and the fault has not been removed after restarting, please contact your local dealer or service center. You need to have the following information ready.

1. Inverter serial number;
2. Distributor or service center of the inverter ;
3. On-grid power generation date;
4. The problem description (including the fault code and indicator status displayed on the LCD) is as detailed as possible.
5. Your contact information.In order to give you a clearer understanding of the inverter's fault information, we will list all possible fault codes and their descriptions when the inverter is not working properly.

Error code	Description	Solutions
F08	GFDI _Relay_Failure	1. When inverter is in Split phase(120/240Vac) or three-phase system (120/208Vac) system, the backup load port N line needs to connect ground; 2. If the fault still exists, please contact us for help.
F13	Working mode change	1. When the grid type and frequency changed it will report F13; 2. When the battery mode was changed to "No battery" mode, it will report F13; 3. For some old FW version, it will report F13 when the system work mode changed; 4, Generally, it will disappear automatically when shows F13; 5. If still same, and turn off the DC switch and AC switch and wait for one minute and then turn on the DC/AC switch; 6. Seek help from us, if can not go back to normal state.
F18	AC over current fault of hardware	AC side over current fault 1. Please check whether the backup load power and common load power are within the range; 2. Restart and check whether it is in normal; 3. Seek help from us, if can not go back to normal state.
F20	DC over current fault of the hardware	DC side over current fault 1. Check PV module connect and battery connect; 2. When in the off-grid mode, the inverter startup with big power load, it may report F20. Please reduce the load power connected; 3. Turn off the DC switch and AC switch and then wait one minute,then turn on the DC/AC switch again; 4. Seek help from us, if can not go back to normal state.
F22	Tz_EmergStop_Fault	Please contact your installer for help.
F23	AC leakage current is transient over current	Leakage current fault 1. Check PV side cable ground connection. 2. Restart the system 2~3 times. 3. If the fault still exists, please contact us for help.
F24	DC insulation impedance failure	PV isolation resistance is too low 1. Check the connection of PV panels and inverter is firmly and correctly; 2. Check whether the PE cable of inverter is connected to ground; 3. Seek help from us, if can not go back to normal state.
F26	The DC busbar is unbalanced	1. Please wait for a while and check whether it is normal; 2. When the hybrid in split phase mode, and the load of L1 and load of L2 is big different, it will report the F26. 3. Restart the system 2~3 times. 4. Seek help from us, if can not go back to normal state.
F29	Parallel CANBus fault	1. When in parallel mode, check the parallel communication cable connection and hybrid inverter communication address setting; 2. During the parallel system startup period, inverters will report F29. when all inverters are in ON status, it will disappear automatically; 3. If the fault still exists, please contact us for help.

Error code	Description	Solutions
F34	AC Overcurrent fault	1. Check the backup load connected, make sure it is in allowed power range; 2. If the fault still exists, please contact us for help.
F35	No AC grid	No Utility 1. Please confirm grid is lost or not; 2. Check the grid connection is good or not; 3. Check the switch between inverter and grid is on or not; 4. Seek help from us, if can not go back to normal state.
F41	Parallel system stop	1. Check the hybrid inverter working status. If there's 1 pcs hybrid inverter is in OFF status, the other hybrid inverters may report F41 fault in parallel system. 2. If the fault still exists, please contact us for help.
F42	AC line low voltage	Grid voltage fault 1. Check the AC voltage is in the range of standard voltage in specification; 2. Check whether grid AC cables are firmly and correctly connected; 3. Seek help from us, if can not go back to normal state.
F47	AC over frequency	Grid frequency out of range 1. Check the frequency is in the range of specification or not; 2. Check whether AC cables are firmly and correctly connected; 3. Seek help from us, if can not go back to normal state.
F48	AC lower frequency	Grid frequency out of range 1. Check the frequency is in the range of specification or not; 2. Check whether AC cables are firmly and correctly connected; 3. Seek help from us, if can not go back to normal state.
F56	DC busbar voltage is too low	Battery voltage low 1. Check whether battery voltage is too low; 2. If the battery voltage is too low, using PV or grid to charge the battery; 3. Seek help from us, if can not go back to normal state.
F58	BMS communication fault	1. it tells the communication between hybrid inverter and battery BMS disconnected when"BMS_Err-Stop" is active; 2. if don't want to see this happen, you can disable "BMS_Err-Stop" item on the LCD; 3. If the fault still exists, please contact us for help.
F63	ARC fault	1. ARC fault detection is only for US market; 2. Check PV module cable connection and clear the fault; 3. Seek help from us, if can not go back to normal state.
F64	Heat sink high temperature failure	Heat sink temperature is too high 1. Check whether the work environment temperature is too high; 2. Turn off the inverter for 10mins and restart; 3. Seek help from us, if can not go back to normal state.

Chart 7-1 Fault information

Under the guidance of our company, customers return our products so that our company can provide service of maintenance or replacement of products of the same value. Customers need to pay the necessary freight and other related costs. Any replacement or repair of the product will cover the remaining warranty period of the product. If any part of the product or product is replaced by the company itself during the warranty period, all rights and interests of the replacement product or component belong to the company.
Factory warranty does not include damage due to the following reasons:

· Damage during transportation of equipment;
· Damage caused by incorrect installation or commissioning;
· Damage caused by failure to comply with operation instructions, installation instructions or maintenance instructions;
· Damage caused by attempts to modify, alter or repair products;
· Damage caused by incorrect use or operation;
· Damage caused by insufficient ventilation of equipment;
· Damage caused by failure to comply with applicable safety standards or regulations;
· Damage caused by natural disasters or force majeure (e.g. floods, lightning, overvoltage, storms, fires, etc.)

In addition, normal wear or any other failure will not affect the basic operation of the product. Any external scratches, stains or natural mechanical wear does not represent a defect in the product.

8.Limitation of Liability

In addition to the product warranty described above, the state and local laws and regulations provide financial compensation for the product's power connection (including violation of implied terms and warranties). The company hereby declares that the terms and conditions of the product and the policy cannot and can only legally exclude all liability within a limited scope.

9. Datasheet

Model	***SUN-3.6K-SG03LP1-EU***	***SUN-5K-SG03LP1-EU***	***SUN-6K-SG03LP1-EU***
Battery Input Date			
Battery Type	Lead-acid or Li-Ion		
Battery Voltage Range(V)	40-60V		
Max. Charging Current(A)	90A	120A	135A
Max. Discharging Current(A)	90A	120A	135A
Charging Curve	3 Stages / Equalization		
External Temperature Sensor	yes		
Charging Strategy for Li-Ion Battery	Self-adaption to BMS		
PV String Input Data			
Max. DC Input Power(W)	4680W	6500W	7800W
PV Input Voltage(V)	370V (125V~500V)		
MPPT Range(V)	150~425V		
Full Load DC Voltage Range	300~425V		
Start-up Voltage(V)	125V		
PV Input Current(A)	13A+13A		
No. of MPPT Trackers	2		
No. of Strings Per MPPT Tracker	1+1		
AC Output Data			
Rated AC Output and UPS Power(W)	3600	5000	6000
Max. AC Output Power(W)	3960	5500	6600
Peak Power(off grid)	2 times of rated power, 10 S		
AC Output Rated Current(A)	15.7A	21.7A	26.1A
Max. AC Current(A)	17.2A	23.9A	28.7A
Max. Continuous AC Passthrough(A)	35A		40A
Power Factor	0.8 leading to 0.8 lagging		
Output Frequency and Voltage	50/60Hz; 220/230 (single phase)		
Grid Type	Single Phase		
Current Harmonic Distortion	THD<3% (Linear load<1.5%)		
Efficiency			
Max. Efficiency	97.60%		
Euro Efficiency	96.50%		
MPPT Efficiency	>99%		
Protection			
PV Input Lightning Protection	Integrated		
Anti-islanding Protection	Integrated		
PV String Input Reverse Polarity Protection	Integrated		
Insulation Resistor Detection	Integrated		
Residual Current Monitoring Unit	Integrated		
Output Over Current Protection	Integrated		
Output Shorted Protection	Integrated		
Surge Protection	DC Type II / AC Type II		

Model	***SUN-3.6K-SG03LP1-EU***	***SUN-5K-SG03LP1-EU***	***SUN-6K-SG03LP1-EU***
Certifications and Standards			
Grid Regulation	CEI 0-21,VDE-AR-N 4105,NRS 097,IEC 62116,IEC 61727,G99,G98, VDE 0126-1-1,RD 1699,C10-11		
EMC/Safety Regulation	IEC/EN 62109-1,IEC/EN 62109-2， IEC/EN 61000-6-1, IEC/EN 61000-6-2,IEC/EN 61000-6-3,IEC/EN 61000-6-4		
General Data			
Operating Temperature Range(℃)	-45~60℃, >45℃ Derating		
Cooling	Smart cooling		
Noise(dB)	<30 dB		
Communication with BMS	RS485; CAN		
Weight(kg)	20.5		
Size(mm)	330W×580H×232D		
Protection Degree	IP65		
Installation Style	Wall-mounted		
Warranty	5 years		

10. Appendix I

Definition of RJ45 Port Pin for BMS

No.	RS485 Pin	CAN Pin
1	RS485B	--
2	RS485A	GND
3	GND	--
4		CANH
5		CANL
6	GND	--
7	RS485A	--
8	RS485B	--

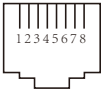

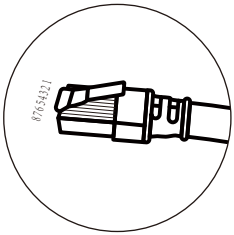

BMS 485 Port

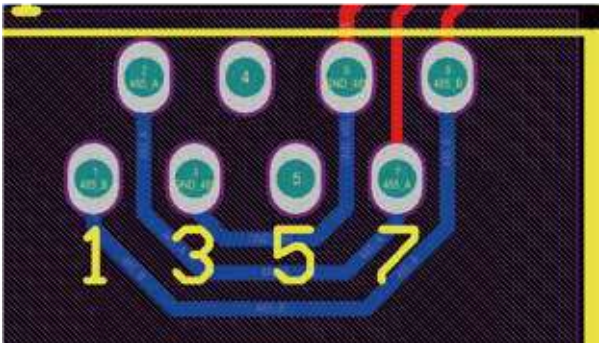

CAN Port

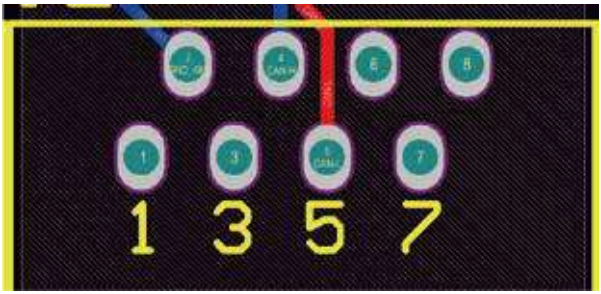

Definition of RJ45 Port Pin for RS485.
This port is used to communicate with energy meter

No.	RS485 Pin
4	RS485B
5	RS485A

RS485 Port

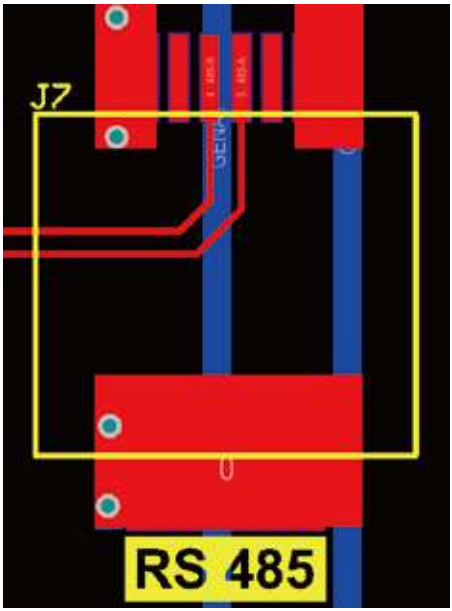

RS232

No.	WIFI/RS232
1	D-GND
2	
3	
4	
5	TX
6	RX
7	12Vdc
8	
9	

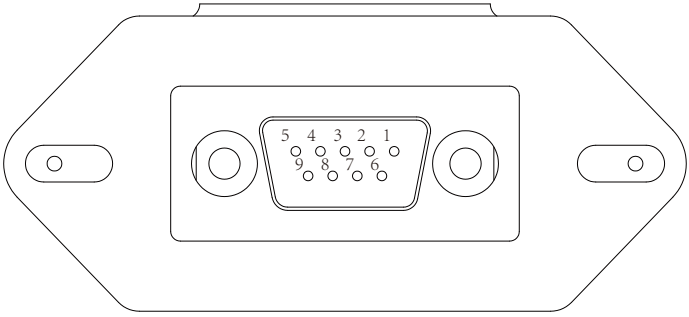

WIFI/RS232

This RS232 port is used to connect the wifi datalogger

11. Appendix II

1. Split Core Current Transformer (CT) dimension: (mm)
2. Secondary output cable length is 4m.

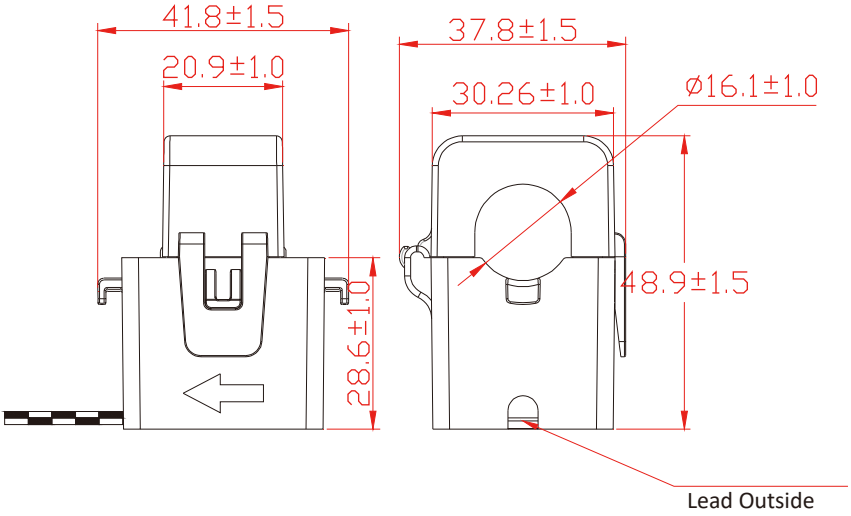

NINGBO DEYE INVERTER TECHNOLOGY CO., LTD.

Add: No.26-30, South Yongjiang Road, Beilun, 315806, Ningbo, China

Tel: +86 (0) 574 8622 8957

Fax: +86 (0) 574 8622 8852

E-mail: service@deye.com.cn

Web: www.deyeinverter.com

30240301000745 Ver: 2.2, 2022-01-12